PACKING METHOD FOR RESOURCE LEVELING (PACK)

by
Robert B. Harris
Professor Emeritus of Civil Engineering
University of Michigan
1989

The heuristic presented below produces a minimum histogram of resources based upon the critical path method. The underlying concept is to use the minimum moment of the resource histogram as a measure of the level of resources. The histogram is built up step-by-step until all activities have been located in time within the constraints of the given network. The resulting histogram is the same as, or very close to, the histogram produced by the *Minimum Moment Method* in the text, *Precedence and Arrow Networking Techniques for Construction,* Chapter 11.

MINIMUM MOMENT CONCEPTS

The heuristic presented here as a method for resource leveling assumes that there is a resource histogram which has a moment that is minimum. The histogram that meets this minimum condition is a rectangle. In theorem form:

> *"When a given set of elements is arranged into a histogram over a fixed set of intervals, the minimum moment of the elements exists when the histogram is a rectangle over the fixed set of intervals." (Harris, page 269)*

Figure 1 shows a given set, $\{A\}$, of elements $y_1, y_2, y_3, y_4,..., y_n$ over a fixed set of intervals from 1 to n. Set $\{A\}$ represents the area of a resource histogram and the elements y_i represent the daily resource sums. Hence,

$$\sum_{i=1}^{n} y_i = \{A\} \qquad \text{(Eq. 1)}$$

The moment of an element of the histogram is $1/2\ y_i^2$ about axis 0-0. The total moment of the set is

$$M_0' = \tfrac{1}{2} \sum_{i=1}^{n} y_i^2$$

which, in accord with the theorem, is to be a minimum and the equation to be minimized becomes

$$M_0 = \sum_{i=1}^{n} y_i^2 \qquad \text{(Eq. 2)}$$

Because all elements of a rectangular histogram are equal in value, setting each element to $y_i = \{A\}/n$ results in a rectangular histogram. When these values of y_i are used in Equation 2, M_0 takes on the value of twice the minimum moment.

OBJECTIVE AND ASSUMPTIONS

The overriding objective of this leveling heuristic is to assign all the activities in the project to specific days such that the histogram of their commonly shared resource approaches a rectangle and the moment of the histogram, as represented by Equation 2, approaches a minimum.

While it is theoretically possible to produce a rectangular histogram and minimum moment, all activities making up the project are encumbered with a number of constraints. These limit and control the positions in time that the activities may assume.

The heuristic relies on the development of a critical path network created by a skilled project management team. It is this network which establishes the constraints controlling the leveling results. It is necessary, therefore, to make certain assumptions about the activities, the network logic, and resources. The major assumptions are:

1. **Activities are assumed to be time-continuous.** Once an activity is started, it is expected that it will continue to completion without interruption.

2. **Resources applied to each activity are assumed to remain constant throughout the duration of the activity.** Thus, an activity will have a constant rate of utilization of the resource. The heuristic processes only one resource at a time. Multiple resources may be handled sequentially or by weighted additions.

3. **The duration of each activity is assumed to remain constant.** Once the duration of an activity is established, no reduction or extension of the duration is permitted by a change in the activity's resource rate. Fractional values may be used for activity durations.

4. **The network logic is assumed fixed.** The network may be cast in either arrow or precedence form, although the heuristic is presented using the precedence network. Any logical relationship may exist between any two activities and multiple relationships are acceptable. Fractional values may be given for relationship lead times between activities.

5. **The project's terminal date is assumed fixed.** The heuristic does not extend or shorten the project duration.

POSSIBLE ACTIVITY ASSIGNMENTS

Critical path network results provide for the Early Start Date, ESD; the Early Finish Date, EFD; and the Total Float, TF, for each activity in the project. Under the assumptions above, it is clear that each activity cannot be started until its ESD is realized and must be finished no later than its LFD. The earliest day that the activity may actually begin to be performed and demand resources is then the day, J, represented by (ESD + 1) and the latest day the activity may end while still demanding resources is the day, J, represented by its (EFD + TF) or the LFD. Between these limits, the activity may occupy any days spanned by its duration.

There are three conditions of occupancy which must be considered. One where the total float is zero, a second where the total float is greater than zero but less than the activity duration, and a third where the total float is greater than or equal to the activity duration. These conditions are illustrated in Figure 2.

In Figure 2(a), an activity, X, has been removed from the network and plotted as a bar. Its duration is 5 days, its ESD is 9, its LFD is 14, and its TF is zero. With these values, the activity must be assigned to days 10 through 14 and its resource rate must contribute to each element of the resource histogram on days 10 through 14.

Figure 2(b) represents a similar plot for an activity, X, where the CPM network results give its duration of 5 days, its ESD of 9, its LFD of 17 and its TF of three days. There are four possible assignment spans for the activity, days 10 through 14, 11 through 15, 12 through 16, and 13 through 17. It may be observed that the number of these possible assignments is one greater than the value of the total float. Regardless of the assignment to be made, the activity must occupy days 13 and 14 and contribute its resource rate to each of these two elements of the resource histogram.

Figure 2(c), the third condition, represents a similar plot of an activity, X, where its duration is 5 days, its ESD is 9, its LFD is 20, and its TF is 6. This activity may be assigned to any of seven possible five-day spans. There are no locations requiring occupancy by the activity.

THE BASE HISTOGRAM AND PACK

It will be recognized that the occupancy conditions of Figure 2(a) correspond to those of all critical activities in a project. Further, those of Figure 2(b) correspond to all those activities in a project that are *near-critical*. **Assigning resource rates for these critical and near-critical activities to all their required individual days, J, results in a histogram of resources which must be realized and is not subject to any leveling procedure.** This histogram is termed the *Base Histogram*. In a sense, this histogram can be considered as a *floor*, albeit an irregular one, upon which the minimum resource histogram must be built.

In concept, one can imagine adding resource rates as small packages to the Base Histogram in such a way that the final histogram approaches a rectangle and the moment of the histogram approaches the minimum of Equation 2. The concept can be extended further to packing a container with an irregular floor so that the top surface is as flat as possible. It is from this concept of packing that the name of this heuristic (PACK) has been chosen.

ADDING TO THE BASE HISTOGRAM

Attention must now be directed toward choosing the assignment position for each of the near-critical and noncritical activities represented in Figures 2(b) and 2(c). Each of these activities has a resource rate as yet unassigned to any particular histogram element. As the controlling network solution is an early start one, an activity's resource rate may be imagined to exist on every day of the activity's early start position, that is, from its (ESD + 1) day to its EFD day. Positioning the activity is tantamount to shifting the activity from this imagined early start position to some other position such that the histogram moment is reduced.

Assume that one day of an activity having a resource rate, r, is to be shifted from an element, y_1, associated with the imagined early start position of the activity, to an element, y_2, associated with the current resource histogram representing the potentially assignable positions of the activity. the values y_1 and y_2 are elements in the histogram and do not include the resource rate, r. The moment of the histogram before and after this shifting will depend upon whether either y_1 or y_2 is increased by r. The change in histogram moment can be calculated by examining the moments of the elements before and after the shift.

Before shifting takes place, the incremental moment, m_b, can be expressed as

$$m_b = \frac{1}{2}[(y_i + r)^2 + (y_2)^2]$$

where y_1 does not include r.

After the shift has taken place, the incremental moment, m_a, becomes

$$m_a = \frac{1}{2}[(y_1)^2 + (y_2 + r)^2]$$

where y_2 does not include r.

For a reduction in the histogram moment, the incremental moment after the shift must be less than the one before the shift. Therefore

$$m_a < m_b$$

Substituting gives

$$\frac{1}{2}[(y_1)^2 + (y_2 + r)^2] < \frac{1}{2}[(y_i + r)^2 + (y_2)^2]$$

Expanding the terms on each side of the inequality and collecting terms results in

$$ry_2 < ry_1$$

or

$$y_2 < y_1$$

The significance of the above is that to produce a reduction in the resource histogram moment, the activity should be assigned to a position which includes the days in the current histogram having the smallest histogram elements.

The amount of the change (decrease) in the histogram moment, Δm, can be determined by taking the difference between the incremental moments before and after the shift of the increment of the activity. In equation form,

$$\Delta m = m_b - m_a$$

Substituting the above terms for m_a and m_b and reducing the equation results in

$$\Delta m = r(y_1 - y_2)$$

where y_1 and y_2 are the values of the histogram elements at the previously defined positions 1 and 2 respectively, and y_1 is greater than y_2 . It can be seen that the amount of change in the moment is directly proportional to the value of the resource rate, *r*.

Therefore, when two activities having different resource rates compete for the same smallest y_2 position, the activity with the greatest resource rate will give the greatest reduction in the histogram moment.

PRIORITIES FOR ASSIGNING ACTIVITIES.

In building the project minimum resource histogram, every activity must be assigned to its special location and some priority for making these assignments needs to be established. From the conclusion reached in the previous section, the activity in the first priority position is the one with the largest resource rate. Successive priority positions are derived by placing all the activities in decreasing order of resource rate.

It will be recognized that several activities may have the same resource rate. To place these tied resource rate activities in a secondary priority order requires an additional condition which can be derived from an examination of the activity total floats.

Figure 2(a) illustrated that an activity which has zero total float must always contribute its resource rate to the histogram for each day of its duration. Figure 2(b) showed that an activity which has a total float greater than zero but less than its duration, must contribute its resource rate to the histogram on the days of the duration immediately preceding its early finish day, the number of these days being equal to the difference between the activity's duration and total float. Figure 2(c) showed that an activity having a total float equal to or greater than its duration will not be required to initially contribute its resource rate to the resource histogram.

Considering the above three activity and total float conditions, any activity with a zero total float will take precedence over an activity with a total float less than its duration; and an activity with a total float less than its duration will take precedence over an activity with a total float equal to or greater than its duration. It therefore can be concluded that the secondary priority for considering activities for leveling is to place the activities in increasing order with respect to total float.

While activities for leveling may be placed in priority order primarily by decreasing resource rates and secondarily by increasing total floats, the possibility of priority ties still exists. A third condition must be imposed and the sequence step, or position of the activity in the network, appears as a logical third condition.

Total floats are activity chain conditions. This is visualized easily by considering a chain of activities linked one to another but without intermediate linkages to activities in other chains. Under these conditions, the activity terminating the chain establishes the total float for the chain

and all the activities in the chain have the same total float. If the activity at the beginning of the chain is shifted to a later time to effect leveling, all the activities in the chain must shift by the same amount to preserve the relationships existing among them and the total float for each is reduced by the amount of the shift. This action reduces the potential for shifting activities subsequent to the first because of their reduced total floats.

In contrast, if the last activity in the chain is shifted to effect leveling, its total float is reduced by the amount of the shift and all predecessor activity total floats remain unchanged. This action then preserves the potential for shifting preceding activities to effect leveling.

From the above discussion it becomes clear that the priority for considering activities for leveling becomes first, to place the activities in decreasing resource rate order. Second, if a tie on resource rates exists, the second priority is to place the tied activities in increasing order of total float. Third, if there is a tie on both the resource rate and the total float, the priority is to place the activities in decreasing order of sequence steps.

It is possible that activities may still be tied on all three conditions. There seems to be no further logical condition that would influence the priority of assignment and the choice is to place these tied activities in an arbitrary order.

A list of all the network activities to be considered for leveling, sorted in priority order, becomes the *processing queue*. Critical activities do not participate in leveling and are excluded from this queue.

ASSIGNMENT LOCATION AND PENALTIES

For each possible assignment of an activity selected from the processing queue, the values of the elements in the histogram to which the activity's resource rate is to be added are summed. There will be as many element values summed as there are unassigned days in the duration of the activity, and there will be as many sums as there are possible activity assignments.

Recall that the assignment of an activity is to be made to the location where the elements of the current histogram have minimum values, hence, the assignment location for the activity will be at the position where one of the sums is minimum.

Each of the elements of the histogram will be subquently referred to as an *histogram ordinate* inasmuch as the elements of the histogram provide the needed information for constructing a resource histogram. The sum of these will be called the *sum of the histogram ordinates*.

In the discussions above, it has been tacitly assumed that each activity may be assigned a position that is independent of any other activity. This is not true because every activity in the network places constraints on other activities in the network.

It can be expected that of the possible assignments for an activity, there may be several encompassing the elements of the current histogram having minimum values. Any particular one of these assignments may prevent the activity's immediately preceding and following activities from being assigned to days wherein the relationships among the activities would be violated.

It may be observed that when one of these particular activity assignment positions is considered, all of the activity's immediately preceding activities will be allowed future assignments only from their respective (ESD + 1) days through their LFD days or to one day less than the day controlled by the activity being assigned, whichever is earlier in time. In a finish-to-start relationship between the activity being assigned and its preceding activity, the day controlled by the activity being assigned is the start day of the proposed assignment minus the lead time for the relationship, if any lead time exists.

For each of the preceding activity's future assignments, the sum of the histogram ordinates will be evaluated. The minimum of these sums thereby becomes a *penalty* for making the particular assignment of the activity being positioned owing to the preceding activity.

Similarly, when one of an activity's particular assignment positions is considered, all of the immediately following activities will be allowed future assignemnts only beginning at one day more than the day controlled by the activity being assigned or from the (ESD + 1) day, whichever is later in time, and continuing through the LFD day. In a finish-to-start relationship between the activity being assigned and its following activity, the day controlled by the activity being assigned is the finish day of the proposed assignment plus the lead time for the relationship, if any lead time exists.

Again, for each of the following activity's future assignments, the sum of the histogram ordinates will be evaluated and the minimum of these sums thereby becomes a *penalty* for making the particular assignment of the activity being positioned owing to the following activity.

For each possible assignment of an activity, the sum of its *histogram ordinates* and the *penalties* owing to all preceding and following activities are added. **The choice for positioning the activity to effect leveling is then the location which produced the minimum value of these additions. *Should there be several of these minimum additions, the choice is to position the activity to the earliest location in time*.** By doing so, the activity being assigned will retain as much of its float as possible.

Once an activity has been positioned, the histogram ordinates associated with the assignment will be increased by the amount of the resource rate of the activity.

THE LOCATION MATRIX AND ASSIGNMENT CONTROLS

Recall that an activity may be assigned to any series of sequential days equal to its duration within the range from its (ESD + 1) day through its LFD day. The particular assignment chosen must be located within this range, and PACK makes use of certain controls to ensure that the assignment position is properly recognized.

PACK relies on a *location matrix* to identify the activity's assigned position. This location matrix is similar to a bar chart where the rows represent the activities and the columns represent the days in the project. A typical bar chart would have a bar covering the activity-day cells in the activity row indicating its planned duration and schedule. In the location matrix, the cells contain specific information about the location of the activity. The symbols used in each location matrix cell to convey this information are a **"1"** if the activity **must** occupy the cell, a **"2"** if the activity **may** occupy the cell, and a **"0"** (zero) if the activity **must not** occupy the cell. Note that these correspond to the three activity-total float conditions illustrated in Figure 2.

To fix the activity's assigned position, all of the *2s* within the duration span in the activity's location matrix row are changed to *1s* and all other *2s* in the same row are changed to zeros.

When an activity is positioned, it may restrain the range of possible future assignments of its preceding and following activities, as discussed previously. A second control, an *Assignment Control*, AC, has been created to reflect the limit of this range of possible assignments.

The initial assignment range for any activity has been shown to be from the (ESD + 1) day through the LFD day. The number of days in this range is equal to the activity's duration plus its early start schedule total float. Any restraint placed on this range by the positioning of an activity results in a reduction of the number of possible assignment days. The activity duration cannot be reduced so the initial total float value becomes the quantity receiving the reduction.

The initial assignment control, AC, value is set equal to the early schedule total float. When an activity has been positioned, its own AC value becomes zero because no further assignment locations remain.

A positioned activity's immediately preceding activity may be restrained by the day controlled by the positioned activity. In a finish-to-start relationship between the positioned activity and its preceding activity, the day controlled is the start day of the positioned activity less the lead time between the activities, if this lead time exists. In the location matrix row for the preceding activity, all days from the controlled day through the preceding activity's LFD day will not be available for future assignments, and all the *2s* in the location matrix in this span are changed to zeros. The number of these changes represents the reduction in the preceding activity's assignment range and the AC value of the preceding activity is thereby reduced by this amount. Controlled days for all types of relationships are given in Figure 4.

A positioned activity's immediately following activity also may be restrained by the day controlled by the positioned activity. In a finish-to-start relationship between the positioned activity and its following activity, the day controlled is the finish day of the positioned activity plus the lead time between the activities, if this lead time exists. In the location matrix row for the following activity, all days from the preceding activity's (ESD + 1) day through the controlled day will not be available for future assignments, and all the *2s* in the location matrix in this span are changed to zeros. The number of these changes represents the reduction in the following activity's assignment range and the AC value of the following activity is thereby reduced by this amount. Controlled days for all types of relationships are given in Figure 4.

In making future assignments of these neighboring activities, the current AC values will determine the number of assignments to be considered in evaluating their correct assignment positions.

A third necessary control called a *Joint Assignment Control*, JAC, has been created to identify those activities which have been assigned to specific locations. It is needed to select the preceding and following activities which may provide assignment penalties when an activity is being evaluated for positioning.

The initial value of the JAC is set equal to 1. When any activity has been positioned, its JAC value is changed to zero.

ASSIGNMENT ILLUSTRATION

To more fully understand the concepts discussed in the previous sections, Figure 3 is presented to illustrate in detail the assignment choice and subsequent changes.

Three activities from a precedence network are shown in Figure 3(a). Each has a total float of 8 days and a duration of 2 days. Activity B is to be assigned and its resource rate, r_b, is 3 resource units. The computed ESD, EFD, LSD, and LFD values are shown in the usual manner above and below each activity and all relationships as shown as finish to start. Also assume that the preceding activity to Activity A has been assigned and that the following activity to Activity C has been assigned.

Figure 3(b) shows the three corresponding rows of a location matrix. Activity A can be scheduled in any two cells, its duration, within the range from day 11 through day 20, hence, *2s* are shown in the cells throughout this range. In a similar fashion, the possible locations for scheduling Activityes B and C are shown by the *2s* in their respective rows. For the moment, ignore the strikethroughs on any entries in this figure.

Beneath the location matrix are found the histogram ordinates, RS(J), for the current histogram.

Figure 3(c) is a table in which the assignment location calculations are displayed. The first column of the table is the reference number of the possible assignments for Activity B. The maximum number is 9, one more than the total float of Activity B which is 8 days.

The second column lists all the possible assignments for Activity B and the third column shows the sum of the histogram ordinates for each of these assignments. Observe that if Activity B was to be assigned to days 13 and 14, the sum of the histogram ordinates, ΣRS(J), would be 7 units from day 13 and 7 units from day 14 for a total of 14 resource units. It may be noted that the smallest of these sums occurs at Assignments 4, 5, and 6 and any of the corresponding locations would contribute to the minimum resource histogram if Activity B was being assigned independently.

The fourth and fifth columns contain information about the penalties incurred by Activity A for each of the nine assignments of Activity B. Observe that if Activity B was assigned to days 13 and 14, Activity A could only be assigned at some future time to days 11 and 12 because of the finish-to-start relationship between the activities. The addition of the histogram ordinates from days 11 and 12 totals 18 units. This is the penalty, Min ΣRS(J), contributed by Activity A if Activity B was assigned to days 13 and 14. Note further that for Assignments 6 through 9, the minimum penalty contributed by Activity A is 4 units because the earliest minimum future location for Activity A would be days 16 and 17. The earliest location is chosen to allow the greatest amount of float for Activity B.

The sixth and seventh columns provide similar penalties owing to Activity C. As before, if Activity B is assigned on days 13 and 14, Activity C could be assigned to any future location from day 15 through day 24. Assigning Activity C to days 15 and 16 would give a sum of 7 units and assigning Activity C to days 16 and 17 would give a sum of 4 units. This location for Activity C is the earliest one having a minimum sum of the histogram ordinates and is the penalty, Min ΣRS(J).

The last column of the table is the total of the ΣRS(J) values for Activity B and the penalties owing to Activity A and Activity C. For Assignment 1, this is 36 units. Notice that the smallest of these totals in the last column is 17 units. It is this location, days 17 and 18, corresponding to Assignment 5, which permits the assignment of Activity B while recognizing its relationships between Activity A and Activity C.

To implement this decision, refer again to Figure 3(b). There are three columns to the left of the location matrix. The first is for the assignment control, AC; the second is for the joint assignment control, JAC; and the third is the activity's identification. The AC values for each activity are the early start schedule total float of 8 days. The JAC values are each 1.

In the location row for Activity B the *2s* in cells 17 and 18 are changed to *1s* to show that Activity B must now be located there. All the other *2s* in this row are changed to zeros and the AC and JAC values for Activity B are reduced to zero, indicating that the activity has been positioned. These alterations are shown by the strikethrough's on the *2s* and the insertion of the other numbers above each of the *2s* in the affected cells and by the changes indicated in the AC and JAC columns.

Activity B now is scheduled to begin on day 17 and Activity A cannot be scheduled to end later than day 16 to maintain the finish-to-start relationship between them. Consequently, the *2s* in Activity A's row from day 17 through day 20 are changed to zeros to block out any future assignments of Activity A to these locations. The number of *2s* that were changed is 4 and the AC for Activity A is reduced from 8 days to 4 days as shown by the changes in the AC column.

Similarly, Activity B is scheduled to end on day 18 and Activity C cannot be scheduled to start before day 19 to maintain the relationship between them. The *2s* in Activity C's row on days 15 through 18 are changed to zeros and the AC for Activity C also is reduced by four days.

The current histogram ordinates on days 17 and 18 have had their respective values changed from 2 to 5 to show the addition of the resource rate of 3 contributed to the histogram by Activity B.

These transactions complete Activity B's assignment and end the illustration.

COMPLETION OF THE HEURISTIC

Activities are selected from the processing queue in priority order beginning with the first activity in the queue. As discussed above, each activity will have its position determined and the histogram ordinates will have been augmented to reflect the contribution of its resource rate to the histogram. When the priority queue has become empty, the process stops and it will be observed that all the JAC values have become zero.

The histogram ordinates existing after the last activity of the project has been assigned are the ordinate values of the minimum resource histogram after leveling.

The project schedule after all the activities have been positioned is found in the final location matrix. All final schedule values and floats can be calculated readily by considering each activity's start day minus 1 as an ESD and the finish day as an EFD.

SPECIAL CONSIDERATIONS

While carrying out the leveling process, there are two conditions that may develop and need special consideration. One, where it is not possible to determine a penalty because the relationship between two activities would be violated, and a second, where there are no *2s* in an activity's location matrix row.

To illustrate the first case, assume that for the activities in Figure 3(b), the processing queue places Activity C before Activity A and Activity A before Activity B.

Activity C would be selected first from the processing queue. Its computed assignment position would be to days 18 and 19, thereby restraining Activity B to end no later than day 17 and reducing the AC value of Activity B from 8 days to 3 days.

The next activity to be selected from the processing queue would be Activity A. Activity B's penalty for the first four assignments of Activity A would be 4 units when Activity B is located on days 16 and 17. However if Activity A is proposed to start an day 15 and end on day 16, there would not be enough room for Activity B to be scheduled in the future owing to the restraint placed upon it by Activity C., and the penalty would be recorded as 50,000 units (or infinity) to prevent Activity A from being assigned to this postion. Likewise, the penalties for the remaining possible assignments for Activity A would be 50,000 units. These penalties would force Activity A's assignment position to days 14 and 15.

In a similar manner, should Activity A be first in processing queue and be followed by Activities C and B respectively, the computed assignment would position Activity A on days 16 and 17 and Activity B would be restrained from starting any earlier than day 18. Therefore, in computing the assignment for Activity C, the first five assignment penalties owing to Activity B would be 50,000 units because of the restraint placed on Activity B by the positioning of Activity A. The schedule for Activity C would then be on days 20 and 21.

The second case, no *2s* in the location matrix row, only occurs if fractional values are used for activity durations or relationship lead times. It is a rare occurrence and happens only if the integer values of the EFD and LFD are the same for an activity being used to compute a penalty. For example, if a penalizing activity's EFD were 12 days and if its LFD were 12.8 days, the integer value for each would be 12 and the penalty owing to this activity would be recorded as zero.

THE PACK HEURISTIC

INPUTS NEEDED

The inputs needed for PACK are similar to those required for other leveling heuristics. Specific inputs are:

1. **A CPM network.** This may be either in arrow or precedence form, but precedence is preferred.

2. **The resource rate for each activity.**

3. **The duration of each activity.** This may be zero, any integer or any real number.

4. **The early start schedule values for each activity from a standard CPM solution.** Essential values are the Early Start Date (ESD), Early Finish Date (EFD), and Total Float (TF). Other values may be either accessed from the CPM solution or computed as needed.

5. **The sequence step for each activity.**

HEURISTIC OUTLINE

1.0 Construct the network and determine the relationships among the activities. Compute the necessary inputs to the heuristic for each activity. (If CPM5 is used, these inputs are automatically generated.)

2.0 Set up a location matrix. The rows are the activities and the columns are the days in the project, beginning with the first day and ending with the last day.

- 2.1 Enter *1s* in cells each activity must occupy.
- 2.2 Enter *2s* in cells each activity may occupy.
- 2.3 All other cells are considered to have zeros and represent locations that an activity must not occupy.
- 2.4 Compute the histogram ordinates. On each day, add only resource rates from rows in the location matrix containing *1s*.

3.0 Set up the activity processing queue comprised of all noncritical activities.

- 3.1 Give first priority to the activity having the largest resource rate. Order other activities by resource rate, from largest to smallest rates.
- 3.2 If resource rates are tied, give priority to total floats, from smallest to largest.
- 3.3 If total floats are tied, give priority to sequence steps, from largest to smallest.
- 3.4 If sequence steps are tied, then the priority is arbitrary.

4.0 Select the first activity from the processing queue for positioning. Determine the sum of the histogram ordinates for each of the activity's assignable days.

5.0 Select an immediately preceding activity to the activity selected in Step 4.0 and compute this preceding activity's minimum penalty for each possible assignment of the activity being positioned.

5.1 If the activity being positioned permits the preceding activity to be assigned, determine the minimum sum of the histogram ordinates for the preceding activity. Only histogram ordinates beneath the *"2"* cells in the preceding activity's location matrix row are used for this minimum sum. Consider all possible assignments for the preceding activity from its (ESD +1) day to the day controlled by the assignment of the activity being positioned or to the LFD day of the preceding activity, which ever is earlier. Tabulate these minimum sums as penalties opposite each of the possible assignments for the activity being positioned.

5.2 If the activity being positioned does not permit the preceding activity to be assigned because of the relationship between them, the penalty is tabulated as an arbitrary value of 50,000.

5.3 If no *2s* appear in the preceding activity's location matrix row, ignore Steps 5.1 and 5.2 and tabulate the penalty as a zero.

5.4 Select another preceding activity and repeat Steps 5.1, 5.2 or 5.3. When all preceding activities have had their penalties determined, continue with Step 6.0.

6.0 Select an immediately following activity to the activity selected in Step 4.0 and compute this following activity's minimum penalty for each possible assignment of the activity being positioned.

6.1 If the activity being positioned permits the following activity to be assigned, determine the minimum sum of the histogram ordinates for the following activity. Only daily resource sums beneath the "2" cells in the following activity's location matrix row are used for this minimum sum. Consider all possible assignments for the following activity from its (ESD +1) day or from the day controlled by the assignment of the activity being positioned, which ever is later, to the LFD day of the following activity. Tabulate these minimum sums as penalties opposite each of the possible assignments for the activity being positioned.

6.2 If the activity being positioned does not permit the following activity to be assigned because of the relationship between them, the penalty is tabulated as an arbitrary value of 50,000.

6.3 If no *2s* appear in the following activity's location matrix row, ignore Steps 6.1 and 6.2 and tabulate the penalty as a zero.

6.4 Select another following activity and repeat Steps 6.1, 6.2 or 6.3. When all following activities have had their penalties determined, continue with Step 7.0.

7.0 For each possible assignment of the activity being positioned, add the sum of the histogram ordinates from Step 4.0 and all penalties from Steps 5.0 and 6.0. Determine the minimum of these totals and position the activity at the location which produced this minimum. When the minimum total is tied, position the activity at the location which is earliest in time.

8.0 Effect the position assignment determined in step 7.0:

8.1 In the positioned activity's location matrix row, change each 2 on the activity's assigned days to 1. Change all other *2s* in the activity's row to zero.

8.2 Change the positioned activity's values of the assignment control, (AC), and the joint assignment control, (JAC), to zero.

8.3 Add the resource rate for the activity to each histogram ordinate on each day where the *2s* were changed to *1s* in Step 8.1.

9.0 Block out assignable days for preceding and following activities restrained by the activity's position assignment.

9.1 If the controlled day for the activity is the same as a preceding activity's possible assignment day, change all *2s* to zero in the preceding activity's location matrix row from this day until the preceding activity's LFD. The controlled day depends upon the type of relationship link between the activities. (See Figure 4.)

9.1.1 For each day where *2s* were changed to *1s* in Step 9.1, reduce the assignment control, (AC), values by 1 day.

9.2 If the controlled day for the activity is the same as a following activity's possible assignment day, change all *2s* to zero in the following activity's location matrix row from the ESD to this day. The controlled day depends upon the type of relationship link between the activities. (See Figure 4.)

9.2.1 For each day where *2s* were changed to *1s* in Step 9.2 reduce the assignment control, (AC), values by 1 day.

9.3 Repeat Steps 9.1 and 9.2 until all preceding and following activities are adjusted.

10.0 Select the next activity from the processing queue and repeat steps 4.0 through 9.0.

11.0 When the processing queue is empty, the histogram ordinate values are the ordinates for drawing the leveled histogram.

PACK EXAMPLE AND COMMENTARY

A complete hand solved example of the application of PACK is given below along with commentary. It is coordinated with the heuristic outline above by outline number.

1.0 The network for the example is shown in Figure 5. The diagram is in the preferred precedence form and shows the activity number, activity name, activity duration, and finish-to-start relationships among the activities. Links with zero lag are shown as double lines. Links with single lines each have their respective lag value written above the link. The critical path is indicated by the links with triple lines, and critical activities are shown in bold. Early start dates and early finish dates are shown above each activity, and the resource rate and total float are shown below each activity. Sequence steps are displayed beneath the diagram.

Pack may be used with an arrow diagram, the usual solution of which will give the same ESD, EFD, and TF values but not the sequence steps. Sequence steps for arrow diagrams may be computed by making a forward pass assuming the start of the project to be 1 and each activity's duration to be 1. The resulting "early starts" for the activities will be their sequence step numbers.

2.0 Figure 6 is the location matrix. The format has been chosen to simplify the recording of the information as the process unfolds. The six columns to the left of the double line contain, for each activity, the sequence step, SS; the resource rate, R; the assignment control, AC; the joint assignment control, JAC; the duration, DUR; and the activity identification, ACT. The columns to the right of the double line relate to the days of the project. In this instance, there are 16 columns, one for each day of the project's duration.

There are 12 rows in the matrix, one for each activity of the project. The first five of these contain information about the critical activities. Critical activities are listed separately because these activities do not enter into the leveling process but do contribute resource values to the Base Histogram. It will be noticed that the seven rows for the noncritical activities are double spaced and are separated with double lines at each sequence step. This is done simply for convenience in recording the changes to be made later. The activities may be entered in any order, but the grouping of them in sequence step order aids in making future adjustments to upstream and downstream activities.

For each activity, values are entered in each of the six columns to the left of the double line. All except the JAC values are taken from the network of Figure 5. (The AC values are the respective total floats of the activities in the network.) The JAC values are each 1.

2.1 The critical activities in the first five rows have no float and remain fixed in position, therefore, a *1* is entered in each cell of the matrix corresponding to each day of their respective durations. Near-critical activities having AC values less than their duration also have some fixed positions. There is only one such activity in this project, Activity 40 (G), and *1s* are entered in its row at days 5, 6, and 7 to show the days in its assignment that must remain fixed. On the remaining days in Activity 40’s range of possible assignments, *2s* are entered.

2.2 Activities may occupy any sequential number of days equal to their durations within the range of their possible assignments and *2s* are entered on each of the days in their respective ranges. For example, Activity 10 (A), which may start on day 1 but must end on day 8, has *2s* entered in its range from day 1 through day 8.

2.3 All cells in the location matrix which do not have *1s* or *2s* are considered to have zero values. These are not shown so that the matrix remains uncluttered.

2.4 At the bottom of the matrix are found the histogram ordinates, RS(J), for each day of the project. These values must always exist because of the activities which have fixed locations and they form the ordinates in the Base Histogram. Note that on day 1 there is a *1* in the row for Activity 15 (B). The resource rate for Activity 15 (B) is 6 units so the histogram ordinate is 6 units for that day. Now examine day 5, Activities 35 (F) and 40 (G) each have *1s* in their respective rows. The histogram ordinate for day 5 then becomes the sum of 4 units from Activity 35 (F) and 6 units from Activity 40 (G), for a total of 10 units.

3.0 The processing queue is shown at the top of Figure 7. It includes only the noncritical activities, as these are the only activities that can be considered for leveling.

3.1 The resource rates range from a maximum of 6 units to a minimum of zero units. Therefore, Activity 40 (G) will take precedence for scheduling over Activities 20 (C) and 25 (D). Likewise, Activities 20 (C) and 25 (D) take priority over Activities 50 (J), 30 (E), and 10 (A), and these take priority over Activity 45 (H).

3.2 To break the ties in the resource rate of 4 units, Activity 20 (C), with a total float of 3 days, will take priority over Activity 25 (D, with a total float of 8 days. Similarly, Activities 50 (J) and 30 (E) take priority over Activity 10 (A) because of their ties in the resource rate of 2 units.

3.3 Note that Activities 50 (J) and 30 (E) are tied on both resource rate and total float; hence, Activity 50 (J) on sequence step 4 will take priority over Activity 30 (E) on sequence step 3.

3.4 In this example, there are no activities that are tied for all three conditions.

4.0 Activity 40 (G) is the first activity in the processing queue and it is selected for positioning in Cycle 1. (The cycles in Figure 7 are numbered from 1 through 7.) This activity has an AC value of 3 days and a duration of 6 days. It has the potential of blocking future positions of Activities 20 (C), 50 (J) and 55 (K) as seen from the diagram of Figure 5. These potential blocks are shown to the right of the activity in Cycle 1 of Figure 7. Note that Activity 55 (K) has a JAC value of zero in Figure 6 indicating that it has already been positioned; therefore, it is marked *Assigned* in Cycle 1.

Activity 40 (G) has an AC value of 3 days from Figure 6 so it has four possible assignments, days 2 through 7, 3 through 8, 4 through 9, and 5 through 10. These potential assignments are listed in the left column of Cycle 1 in Figure 7.

The second column in Cycle 1 shows the sum of the histogram ordinates for each possible assignment. For example, if Activity 40 (G) is assigned to days 2 through 7, the ΣRS(J) is

the sum of the RS(J) values, each of 1 unit, on days 2, 3, and 4 for a total of 3 units. Note that these are the RS(J) values below the *2s* in the activity's location matrix row. The RS(J) values of 10 units on days 5, 6, and 7 are not included in the sum because the activity must be scheduled on these three days as indicated by the *1s* in the activity's location matrix row.

If Activity 40 (G) is assigned to days 3 through 8, the ΣRS(J) value is 6 units and is comprised of the 1 units from days 3 and 4 and the 4 units from day 8. Again, these are the RS(J) values beneath the *2s* in the activity's location matrix row within the range of day 3 through day 8. The remaining ΣRS(J) values have been similarly derived.

5.0 The only preceding activity to Activity 40 (G) is Activity 20 (C). The assignment position and corresponding penalty owing to Activity 20 (C) are shown in the third and fourth columns of Cycle 1, respectively.

5.1 Activity 40 (G) has a finish-to-start relationship to Activity 20 (C). Therefore, if Activity 40 (G) is scheduled to start on day 2, Activity 20 (C) can not finish later than day 1. The RS(J) value for day 1 is 1 unit and this becomes the penalty for making the assignment of Activity 40 (G) to days 2 through 7.

Now if Activity 40 (G) is to be scheduled to start on day 3, Activity 20 (C) could end on either day 1 or day 2. Each of these assignments results in a Min ΣRS(J), a penalty, of 1 unit; and because they are tied, the location earliest in time which produced the tie is chosen. The resulting assignment position for the penalty is day 1 as shown in column three opposite Activity 40 (G)'s assignment days of 3-8.

5.2 There may arise situations where it is not possible to schedule a preceding activity for a given assignment of an activity being positioned. If this were to be the case, the penalty is arbitrarily given a value of 50,000, a large number that would exclude this assignment from being made. For example, should Activity 20 (C) have had a duration of 2 days, Activity 40 (G) could not be scheduled to start on day 2 so the penalty for the 2-7 assignment would become 50,000.

5.3 In this sample, there are *2s* in each cell in the location matrix in the row for Activity 20 (C). In the rare case where there are not any *2s* in the row, the penalty is arbitrarily set to zero.

5.4 There is only one preceding activity to Activity 40 (G) in this example. If there were another, the above steps would be repeated to compute the penalties. This process would continue until all the penalties for the preceding activities to the activity being positioned have been computed.

6.0 The are two following activities to Activity 40 (G), Activity 50 (J) and Activity 55 (K). Activity 55 (K) has been assigned because of its critical nature, so Activity 50 (J) is the only one that may create penalties. The assignment positions and corresponding penalties owing to Activity 50 (J) are shown in the fifth and sixth columns, respectively.

6.1 Activity 40 (G) has a finish-to-start relationship to Activity 50 (J). Therefore, if Activity 40 (G) is scheduled to finish on day 7, Activity 50 (J) can not start earlier than day 8. The duration of Activity 50 (J) is 4 days and four RS(J) values must be

summed to get the penalty. If this following activity were to be scheduled on days 8 through 11, the Min ΣRS(J) value would be 13 units. However, Activity 50 (J) could begin at any later day and still maintain the relationship. It will be observed that if Activity 50 (J) is scheduled on days 11 through 14, the minimum penalty would be 4 units. This location is the earliest one that produces this minimum penalty and is the one that is recorded in columns five and six.

6.2 There may arise situations where it is not possible to schedule a following activity for a given assignment of an activity being positioned. If this were to be the case, the penalty is arbitrarily given a value of 50,000, a large number that would exclude this assignment from being made.

6.3 In this sample, there are *2s* in each cell in the location matrix in the row for Activity 50 (J). In the rare case where there are not any *2s* in the row, the penalty would be set arbitrarily to zero.

6.4 There is only one assignable following activity to Activity 40 (G) in this example. If there were another, the above steps would be repeated to compute the penalties. This process would continue until all the penalties for the following activities to the activity being positioned have been computed.

7.0 The last column of Cycle 1 in Figure 7 shows the addition of the ΣRS(J) and Min ΣRS(J)'s for each assignment of Activity 40 (G). The minimum of these additions is 8 units and is shown in bold and in parentheses. The location of Activity 40 (G) which produced this value is on days 2 through 7 and gives the assignment for the activity which will produce the minimum resource histogram. If there were more than one 8, the assignment would be made to the earliest position in time. This is done so that the amount of float for the activity after assignment is as large as possible to allow for future adjustment of the schedule, should that be necessary.

8.0 It is now necessary to make adjustments to update the location matrix and augment the resource sums for the assignment determined in Steps 4.0 through 7.0. Figure 8 has been prepared to show the various adjustments made in this example.

8.1 Examine the row for Activity 40 (G) in the location matrix of Figure 8. This activity was assigned to days 2 through 7 in Step 7.0 and the *2s* on days 2, 3, and 4 have been changed to *1s*. (The subscripts shown are for convenience only and are used to indicate the cycle in which the change was made. They are helpful in checking the results, should this be necessary.) The *2s* on days 8, 9, and 10 have been changed to zeros to indicate that the activity cannot be located in those positions.

8.2 In the same activity row, the values of the AC and JAC have been changed to zeros to indicate that the activity has been assigned.

8.3 Beneath the location matrix, a new row has been added to show the changes in the resource histogram. The *1s* on days 2, 3, and 4 have been struck through and 7s have been substituted in this row to show that the histogram values have had the resource rate of 6 units for Activity 40 (G) added to the histogram ordinates.

9.0 The location matrix next is adjusted to show the blocking that has been created by the assignment of Activity 40 (G). The adjustments are made first, to the upstream activities and second, to the downstream activities.

9.1 The controlled day for Activity 40 (G) for preceding activities is the new start day of the activity, or day 2. The upstream activity relating to Activity 40 (G) is Activity 20 (C), and in this activity's location matrix row, all the *2s* from day 2 through day 4 have been changed to zeros. This blocks Activity 20 (C) from occupying these locations when its turn for assignment is addressed.

9.1.1 In Step 9.1 there were three *2s* that were changed, hence the AC value of Activity 20 (C) has been reduced by 3 days and the new value is zero as shown in the AC column.

9.2 The controlled day for Activity 40 (G) for following activities is the finish day of the activity, or day 7. The downstream activity relating to Activity 40 (G) is Activity 50 (J) and because the start day for this activity is day 8, no restraint is created for it.

9.2.1 Because there was no blocking of Activity 50 (J), there is no change in that activity's AC value.

9.3 In this cycle there are no further upstream or downstream activity adjustments to be made to the location matrix.

10.0 The first cycle of the computations has now been completed and Activity 20 (C) from the processing queue is the next activity to be considered.

Cycle 2: The second cycle begins at Step 4.0 and positions Activity 20 (C). The computations are shown in Figure 7. Because the AC value of the activity is currently zero, there is only one possible assignment which gives the ΣRS(J) value of 1 unit. All the preceding and following activities have been assigned, so there are no penalties to be assessed and the assigned position for the activity is day 1. There are no blockings to be recorded and the histogram ordinate value on day 1 has been changed to 5 units.

Cycle 3: The next activity from the processing queue is Activity 25 (D) and the computations proceed as before. The assignment for this activity is shown to be day 11 through day 14. It may be noted that the following Activity 45 (H) is restrained owing to the assigned position of Activity 25 (D), and that the *2s* in the location matrix row for Activity 45 (H) have been changed to zeros on the seven days beginning on day 8 and ending on day 14. The AC value for this activity is reduced by 7 days and now is zero. The histogram ordinates have been changed to show the new values of 5 units on days 11 through 14.

Cycle 4: Activity 50 (J) is the next activity for positioning in the processing queue. Its final location is on days 12 through 15 and the histogram ordinates have been changed to reflect this assignment, the modified values being 7 units on days 12, 13, and 14, and 3 units on day 15. There were no blocking adjustments to be made in the location matrix.

Cycle 5: Activity 30 (E) is the candidate for positioning in Cycle 5. Its assignment is to days 8, 9, and 10. Note that the *2s* on days 5, 6, 7, and 11 have been changed to zeros to fix the position of the activity. Because Activity 30 (E) is scheduled now to start on day 8, the 2 on day 8 of the row for Activity 10 (A) has been struck out and the AC value has become 5 days. Again, each of the resource histogram ordinate values on days 8, 9, and 10 have been changed to 6 units.

Cycle 6: The sixth cycle treats Activity 10 (A) with the result that this activity is assigned to days 1 and 2. There are no activities being restrained, and the histogram ordinate values become 7 units on day 1 and 9 units on day 2.

Cycle 7: The activity to be positioned in this cycle is Activity 45 (H). It has only one possible position which is day 15 and there are no activities to be restrained. The resource rate for Activity 45 (H) is zero which makes no change in the resource histogram. For convenience, the histogram ordinate value on day 15 has been repeated to show that it has been considered in this step.

11.0 The processing queue is now empty and the assignment process stops. The histogram ordinate values for the final histogram have been brought down to the bottom of the location matrix in Figure 8. These are the values that may be used to plot the minimum resource histogram leveled within the constraints of the project.

Figure 9 presents the final, after leveling, network for the example project. The float values and the late start and finish dates have been computed from the start and finish dates taken from Figure 8.

Figure 10 shows the resource histogram before and after leveling. It can be seen that the peak daily demand for the resource has been reduced from 16 units to 10 units and also that the fluctuation from day to day has been smoothed.

PACK

Similar to packing items of various dimensions into a box of fixed width so as to produce a flat top surface.

Similar to packing a suitcase.

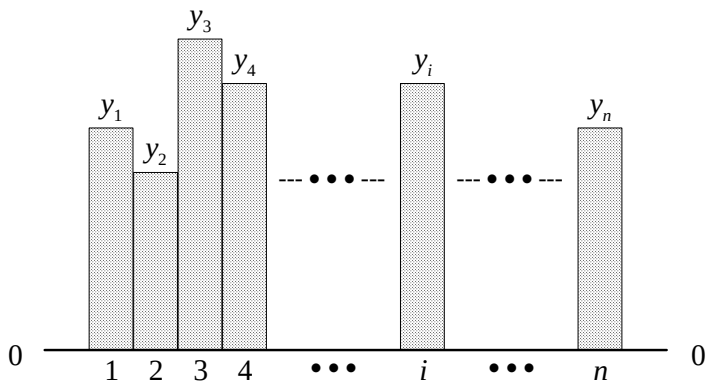

Figure 1 - Elements arranged into a histogram over fixed intervals 1 to *n*.

Constructing the Processing Queue

Give ***higher priority*** to:

- Larger Resource Rate

-Smaller Total Float

- Larger Sequence Step

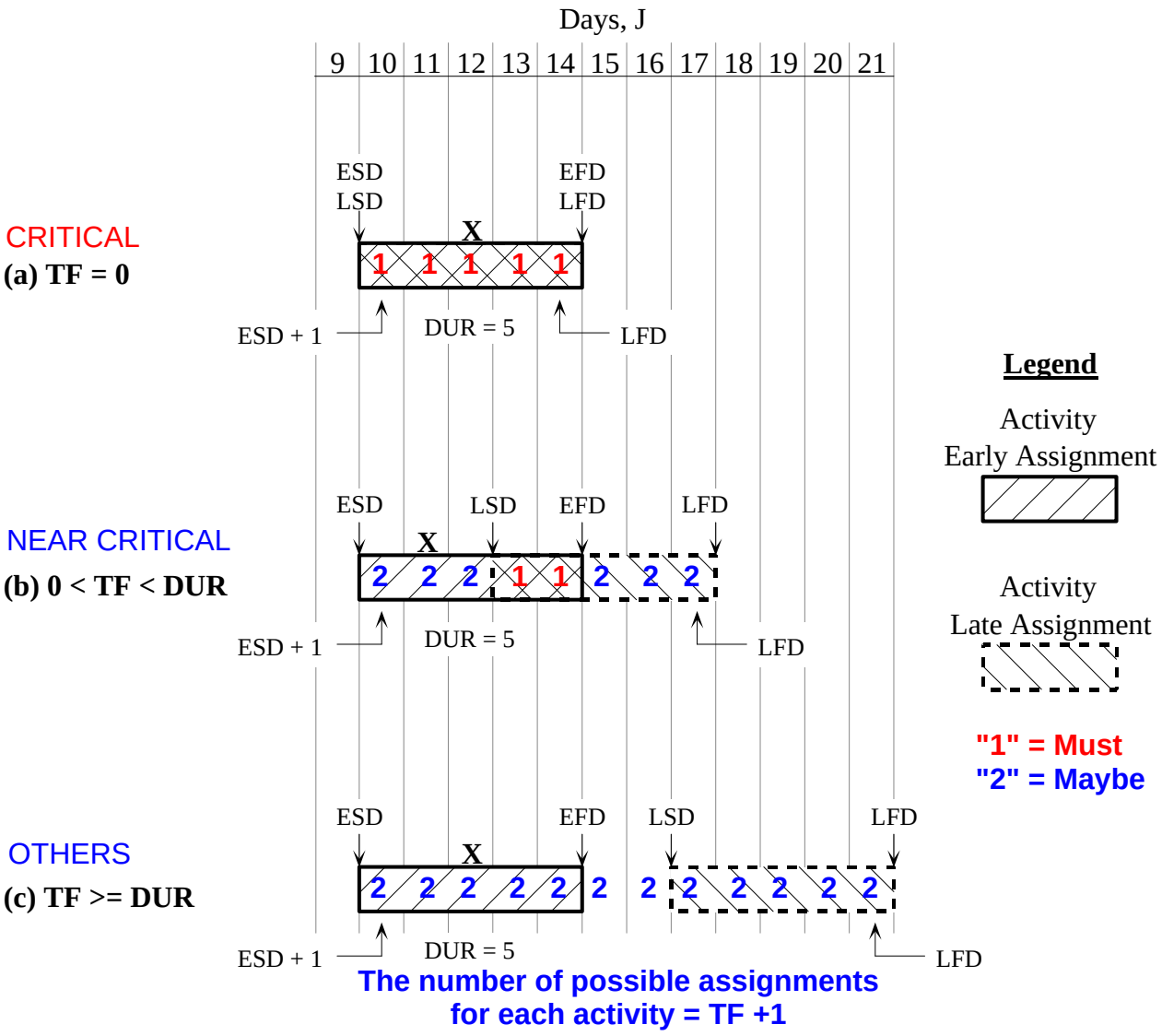

Figure 2 - Activity - Total Float Conditions

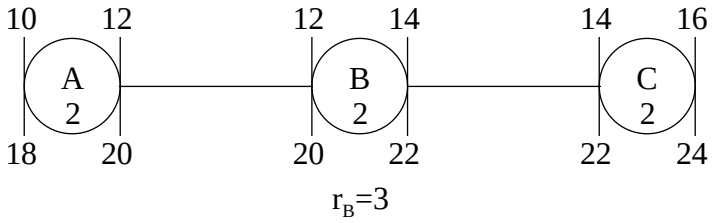

(a) Partial Network

TF

Still available to place?
1=Yes, 0= No

A,B,C are all available for placement in the final barchart. B is next in the processing queue.

AC	JAC	ACT	...	Days, J 11	12	13	14	15	16	17	18	19	20	21	22	23	24	...
~~8~~ 4	1	A		2	2	2	2	2	2	0 ~~2~~	0 ~~2~~	0 ~~2~~	0 ~~2~~					
~~8~~ 0	~~1~~ 0	B				0 ~~2~~	0 ~~2~~	0 ~~2~~	0 ~~2~~	1 ~~2~~	1 ~~2~~	0 ~~2~~	0 ~~2~~	0 ~~2~~	0 ~~2~~			
~~8~~ 4	1	C						0 ~~2~~	0 ~~2~~	0 ~~2~~	0 ~~2~~	2	2	2	2	2	2	
RS(J)			...	9	9	7	7	5	2	~~2~~ 5	~~2~~ 5	2	4	6	6	8	8	...

(b) Partial Location Matrix

If two or more positions **tie** for the **minimum** ∑, then choose the **earliest** one.

Assign. No	B Assign.	B ΣRS(J)	Penalties A Assign.	A minΣRS(J)	C Assign.	C minΣRS(J)	∑
1	13, 14	14	11, 12	18	16, 17	4	36
2	14, 15	12	12, 13	16	16, 17	4	32
3	15, 16	7	13, 14	14	17, 18	4	25
4	16, 17	4	14, 15	12	18, 19	4	20
5	17, 18	4	15, 16	7	19, 20	6	**17**
6	18, 19	4	16, 17	4	20, 21	10	18
7	19, 20	6	16, 17	4	21, 22	12	22
8	20, 21	10	16, 17	4	22, 23	14	28
9	21, 22	12	16, 17	4	23, 24	16	32
∴ Assign B to days 17, 18							

<— min∑

(c) Assignment Location Calculations

Figure 3

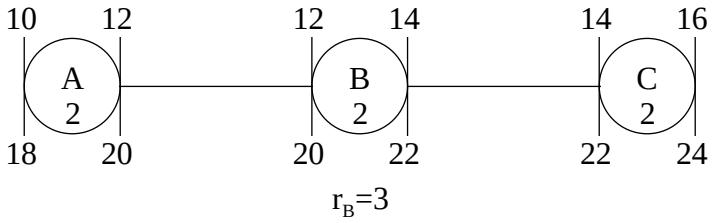

$r_B=3$

Special Case:

Suppose that the processing queue is as follows:

1. C
2. A
3. B

And suppose that

1. C is placed over days (18,19).
2. A is placed over days (15,16).
3. Then, there would be "no room" (i.e., 2 days between A and C) to place B.

(See the location matrix below.)

How to prevent this:

To prevent the placement of A over days (15,16) when evaluating the possible positions of A, set the penalty from B for this position of A to be infinity (very large). This makes the corresponding **Σ** for this position of A very large and ensures that it will not be the one chosen.

AC	JAC	ACT	Days, J ...	11	12	13	14	15	16	17	18	19	20	21	22	23	24	...
~~8~~ 4	1	A		2	2	2	2	2	2	0 ~~2~~	0 ~~2~~	0 ~~2~~	0 ~~2~~					
~~8~~ 0	~~1~~ 0	B				0 ~~2~~	0 ~~2~~	0 ~~2~~	0 ~~2~~	1 ~~2~~	1 ~~2~~	0 ~~2~~	0 ~~2~~	0 ~~2~~	0 ~~2~~			
~~8~~ 4	1	C						0 ~~2~~	0 ~~2~~	0 ~~2~~	0 ~~2~~	2	2	2	2	2	2	
RS(J)			...	9	9	7	7	5	2	~~2~~ 5	~~2~~ 5	2	4	6	6	8	8	...

CONTROLLED DAYS		
Relationship Type	**Control Day for Preceding Activity**	**Control Day for Following Activity**
FTS	$CD = S_B - LT$	$CD = F_B + LT$
STS	$CD = S_B - LT + DUR_A$	$CD = S_B + LT - 1$
FTS	$CD = F_B - LT + 1$	$CD = F_B + LT - DUR_C$
FTF	$CD = F_B - LT + DUR_A + 1$	$CD = S_B + LT - DUR_C - 1$

Legend:

FTS = Finish to Start
STS = Start to Start
FTF = Finish to Finish
STF = Start to Finish
CD = Controlled Day
S = Start Day
F = Finish Day
LT = Relationship Lead Time
DUR = Activity Duration
A = Preceding Activity
B = Activity Being Positioned
C = Following Activity

Figure 4

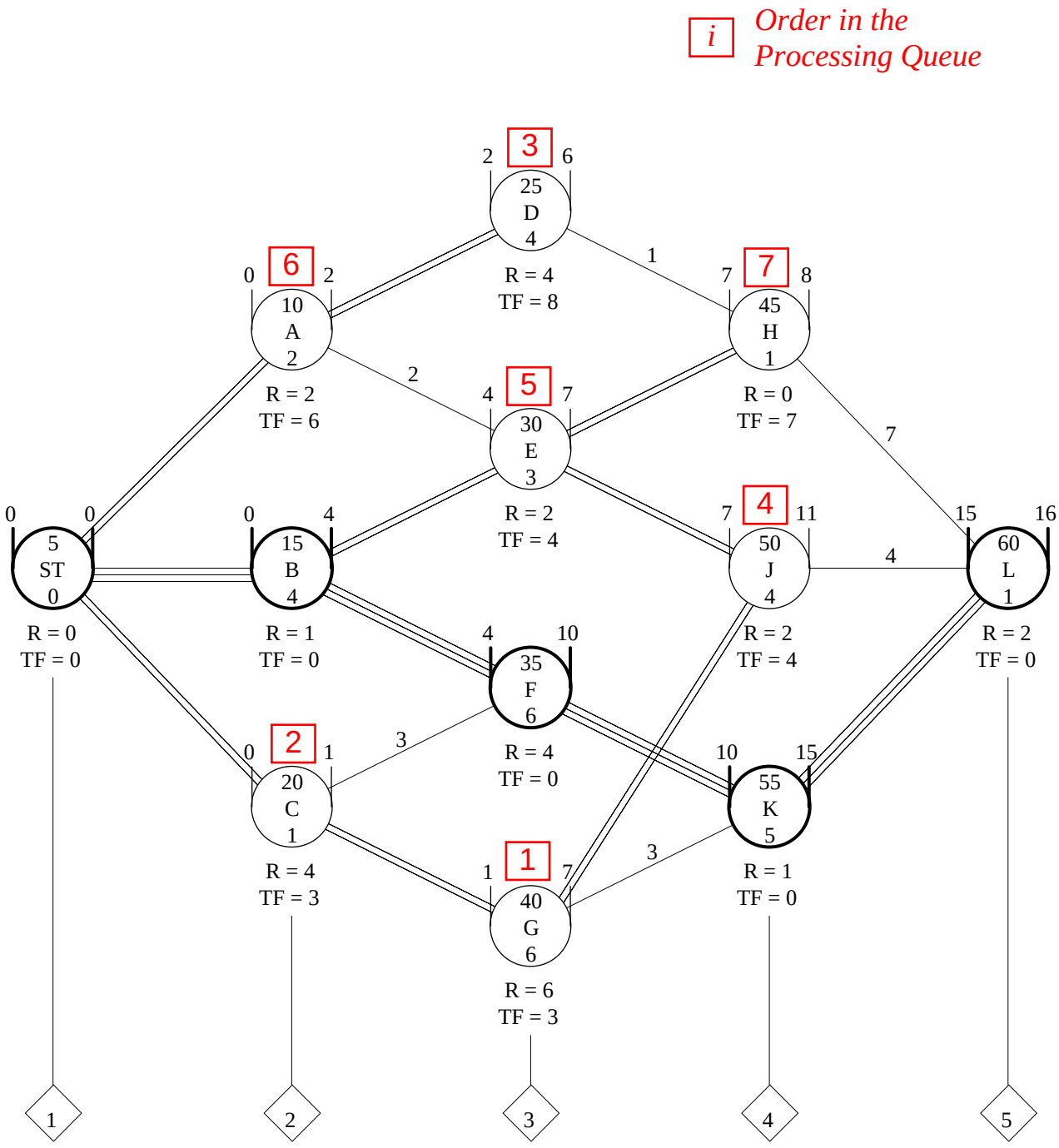

Figure 5 - Example Network

SS	R	AC	JAC	DUR	ACT	Days, J 1	2	3	4	5	6	7	8	9	10	11	12	13	14	15	16
1	0	0	0	0	ST 5																
2	1	0	0	4	B 15	1	1	1	1												
3	4	0	0	6	F 35					1	1	1	1	1	1						
4	1	0	0	5	K 55											1	1	1	1	1	
5	2	0	0	1	L 60																1
2	2	6	1	2	A 10	2	2	2	2	2	2	2	2								
2	4	3	1	1	C 20	2	2	2	2												
3	4	8	1	4	D 25			2	2	2	2	2	2	2	2	2	2	2	2		
3	2	4	1	3	E 30					2	2	2	2	2	2	2					
3	6	3	1	6	G 40		2	2	2	* 1	* 1	* 1	2	2	2						
4	0	7	1	1	H 45								2	2	2	2	2	2	2	2	
4	2	4	1	4	J 50					*	*	*	2	2	2	2	2	2	2	2	
					RS(J)	1	1	1	1	10	10	10	~~4~~	~~4~~	4	1	1	1	1	1	2
					1. 40 (G)																
					2. 20 (C)																
					3. 25 (D)																
					4. 50 (J)																
					5. 30 (E)																
					6. 10 (A)																
					7. 45 (H)																
					FINAL RS(J)																

(*) We include the 6 units of G in the initial histogram over days (5,6,7) to "inform" other activities (to be positioned ***before*** G) that G ***must*** contribute 6 units to each of these 3 days. Thus, these "warned" activities may choose other (better) placements.

Figure 6 – Location Matrix

(*) For this example, its so happens that G is the first activity in the Processing Queue and will be positioned in its final location first. Thus, the positioning of the resource requirements of G over these 3 days at the very beginning of the algorithm does not "warn" other activities. No harm done.

$$RIC = \frac{M_1'}{M_0'} = \frac{n\sum_{i=1}^{n} y_i^2}{\left(\sum_{i=1}^{n} y_i\right)^2} = \frac{n\sum_{i=1}^{n} y_i^2}{A^2} \geq 1$$

n	ΣY	Σ(Y²)	RIC	Method
16	109	1153	1.552731	Unleveled
16	109	821	1.105631	PACK
16	109	821	1.105631	MOM
16	109	909	1.224139	P3 & SureTrak

PROCESSING QUEUE

ACT	R	TF	SS
40 (G)	6	3	3
20 (C)	4	3	2
25 (D)	4	8	3
50 (J)	2	4	4
30 (E)	2	4	3
10 (A)	2	6	2
45 (H)	0	7	4

Basis		
First	**R**	Large to Small
then	**TF**	Small to Large
then	**SS**	Large to Small
then	**Arbitrary**	

ACTIVITY ASSIGNMENT

1. **ACT 40 (G)** Blocks: 20 (C), $DUR_C = 1$
$AC_G = 3$ 50 (J), $DUR_J = 4$
$DUR_G = 6$ 55 (K), Assigned

40 (G) Assign.	40 (G) ΣRS(J)	20 (C) Assign.	20 (C) minΣRS(J)	50 (J) Assign.	50 (J) minΣRS(J)	Σ
2 - 7	3	1	1	11 - 14	4	**(8)**
3 - 8	6	1	1	11 - 14	4	11
4 - 9	9	1	1	11 - 14	4	14
5 - 10	12	1	1	11 - 14	4	17

∴ Assign Activity 40 (G) to days 2 - 7

2. **ACT 20 (C)** Blocks: 5 (ST), Assigned
$AC_C = 0$ 35 (F), Assigned
$DUR_C = 1$ 40 (G), Assigned

20 (C) Assign.	20 (C) ΣRS(J)	Σ
1	1	**(1)**

∴ Assign Activity 20 (C) to day 1

Figure 7.a – PACK Computations

3. **ACT 25 (D)** Blocks: 10 (A), $DUR_A = 2$
$AC_D = 8$ 45 (H), $DUR_H = 1$
$DUR_D = 4$

25 (D) Assign.	25 (D) ΣRS(J)	10 (A) Assign.	10 (A) minΣRS(J)	45 (H) Assign.	45 (H) minΣRS(J)	∑
3 - 6	34	1 - 2	12	11	1	47
4 - 7	37	1 - 2	12	11	1	50
5 - 8	34	1 - 2	12	11	1	47
6 - 9	28	1 - 2	12	11	1	41
7 - 10	22	1 - 2	12	11	1	35
8 - 11	13	1 - 2	12	12	1	26
9 - 12	10	1 - 2	12	13	1	23
10 - 13	7	1 - 2	12	14	1	20
11 - 14	4	1 - 2	12	15	1	**(17)**

∴ Assign Activity 25 (D) to days 11- 14

4. **ACT 50 (J)** Blocks: 30 (E), $DUR_E = 3$
$AC_J = 4$ 40 (G), Assigned
$DUR_J = 4$ 60 (L), Assigned

50 (J) Assign.	50 (J) ΣRS(J)	30 (E) Assign.	30 (E) minΣRS(J)	∑
8 - 11	17	5 - 7	30	47
9 - 12	18	6 - 8	24	42
10 - 13	19	7 - 9	18	37
11 - 14	20	8 - 10	12	32
12 - 15	16	8 - 10	12	**(28)**

∴ Assign Activity 50 (J) to days 12 - 15

Figure 7.b – PACK Computations

5. **ACT 30 (E)** Blocks: 10 (A), $DUR_A = 2$
$AC_E = 4$ 15 (B), Assigned
$DUR_E = 3$ 45 (H), $DUR_H = 1$
50 (J), Assigned

30 (E) Assign.	30 (E) ΣRS(J)	10 (A) Assign.	10 (A) minΣRS(J)	45 (H) Assign.	45 (H) minΣRS(J)	Σ
5 - 7	30	1 - 2	12	15	3	45
6 - 8	24	1 - 2	12	15	3	39
7 - 9	18	1 - 2	12	15	3	33
8 - 10	12	1 - 2	12	15	3	**(27)**
9 - 11	13	1 - 2	12	15	3	28

∴ Assign Activity 30 (E) to days 8 - 10

6. **ACT 10 (A)** Blocks: 5 (ST), Assigned
$AC_A = 5$ 25 (D), Assigned
$DUR_A = 2$ 30 (E), Assigned

10 (A) Assign.	10 (A) ΣRS(J)	Σ
1 - 2	12	**(12)**
2 - 3	14	14
3 - 4	14	14
4 - 5	17	17
5 - 6	20	20
6 - 7	20	20

∴ Assign Activity 10 (A) to days 1 - 2

7. **ACT 45 (H)** Blocks: 25 (D), Assigned
$AC_H = 0$ 30 (E), Assigned
$DUR_H = 1$ 60 (L), Assigned

45 (H) Assign.	45 (H) ΣRS(J)	Σ
15	3	**(3)**

∴ Assign Activity 45 (H) to day 15

8. **Processing Queue Empty – Stop.**

Figure 7.c – PACK Computations

						Days, J															
SS	R	AC	JAC	DUR	ACT	1	2	3	4	5	6	7	8	9	10	11	12	13	14	15	16
1	0	0	0	0	ST 5																
2	1	0	0	4	B 15	1	1	1	1												
3	4	0	0	6	F 35					1	1	1	1	1	1						
4	1	0	0	5	K 55											1	1	1	1	1	
5	2	0	0	1	L 60																1
2	2	~~6~~ 5 ~~5~~ 0 6	~~1~~ 0 6	2	A 10	1 6 ~~2~~	1 6 ~~2~~	0 6 ~~2~~	0 6 ~~2~~	0 6 ~~2~~	0 6 ~~2~~	0 6 ~~2~~	0 5 ~~2~~								
2	4	~~3~~ 0 1	~~1~~ 0 2	1	C 20	1 2 ~~2~~	0 1 ~~2~~	0 1 ~~2~~	0 1 ~~2~~												
3	4	~~8~~ 0 3	~~1~~ 0 3	4	D 25			0 3 ~~2~~	0 3 ~~2~~	0 3 ~~2~~	0 3 ~~2~~	0 3 ~~2~~	0 3 ~~2~~	0 3 ~~2~~	0 3 ~~2~~	1 3 ~~2~~	1 3 ~~2~~	1 3 ~~2~~	1 3 ~~2~~		
3	2	~~4~~ 0 5	~~1~~ 0 5	3	E 30					0 5 ~~2~~	0 5 ~~2~~	0 5 ~~2~~	1 5 ~~2~~	1 5 ~~2~~	1 5 ~~2~~	0 5 ~~2~~					
3	6	~~3~~ 0 1	~~1~~ 0 1	6	G 40		1 1 ~~2~~	1 1 ~~2~~	1 1 ~~2~~	1	1	1	0 1 ~~2~~	0 1 ~~2~~	0 1 ~~2~~						
4	0	~~7~~ 0 3	~~1~~ 0 7	1	H 45								0 3 ~~2~~	0 3 ~~2~~	0 3 ~~2~~	0 3 ~~2~~	0 3 ~~2~~	0 3 ~~2~~	0 3 ~~2~~	1 7 ~~2~~	
4	2	~~4~~ 0 4	~~1~~ 0 4	4	J 50								0 4 ~~2~~	0 4 ~~2~~	0 4 ~~2~~	0 4 ~~2~~	1 4 ~~2~~	1 4 ~~2~~	1 4 ~~2~~	1 4 ~~2~~	
					RS(J)	~~1~~	~~1~~	~~1~~	~~1~~	10	10	10	~~4~~	~~4~~	~~4~~	~~1~~	~~1~~	~~1~~	~~1~~	~~1~~	2
	1.	40	(G)	2-7			~~7~~	7	7												
	2.	20	(C)	1		~~5~~															
	3.	25	(D)	11-14												5	~~5~~ 7	~~5~~ 7	~~5~~ 7		
	4.	50	(J)	12-15																~~3~~	
	5.	30	(E)	8-10									6	6	6						
	6.	10	(A)	1-2		7	9														
	7.	45	(H)	15																3	
					FINAL RS(J)	7	9	7	7	10	10	10	6	6	6	5	7	7	7	3	2

Figure 8 – Final Location Matrix

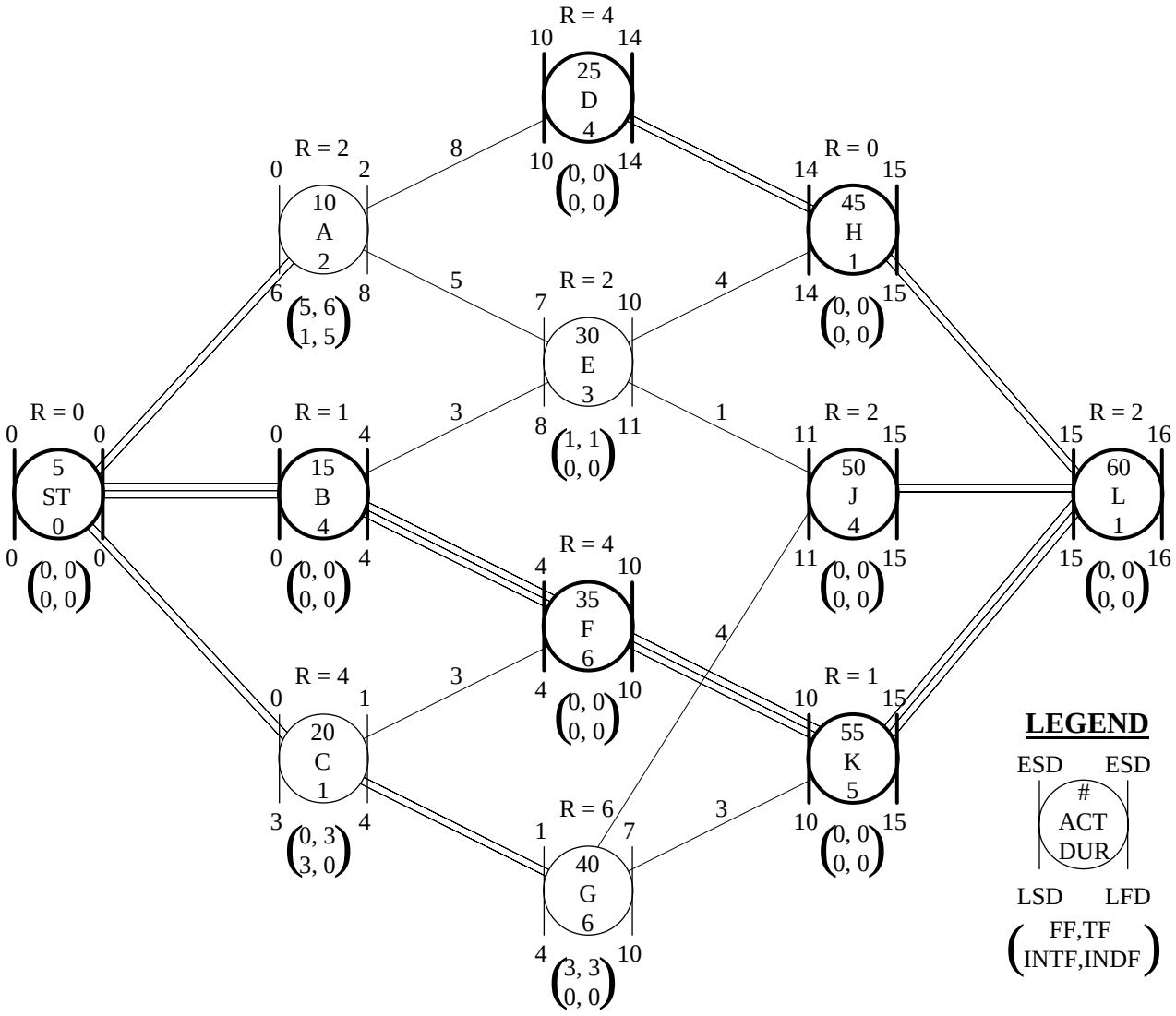

Figure 9 - Example Network After Leveling

n	ΣY	Σ(Y^2)	RIC	Method
16	109	1153	1.552731	Unleveled
16	109	821	1.105631	PACK
16	109	821	1.105631	MOM
16	109	909	1.224139	P3 & SureTrak

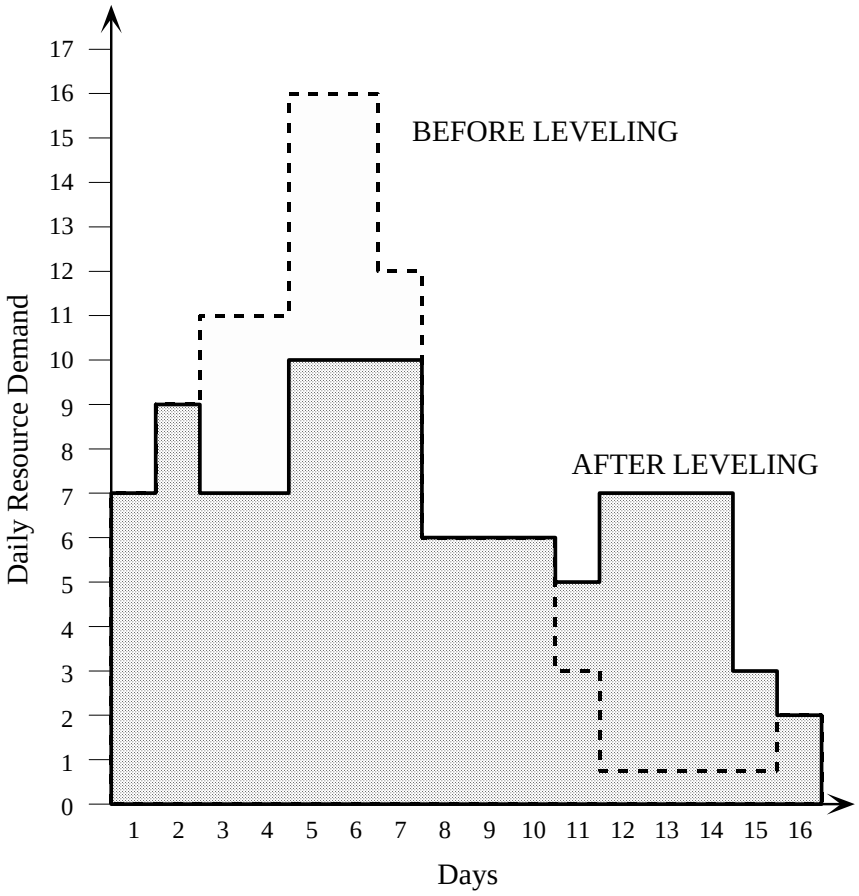

Figure 10 - Resource Histogram Before and After Leveling

Improvements to PACK:

- Ignore penalties from activities with r=0

- Weigh the penalties for each activity before adding them to the final ∑
  * E.g., Multiply the ∑RS(J) for each activity by its corresponding r

- Update "2"s to "1"s as soon as $AC_i < T_i$ to "warn" remaining activities that will be positioned ahead of activity I.