

(a) Basic activity



(b) Independent activities

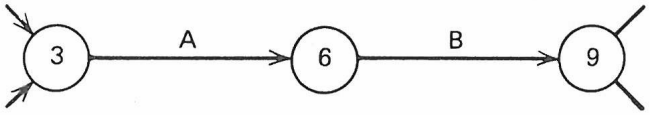

Activity B depends upon the completion of Activity A

(c) Dependent activities

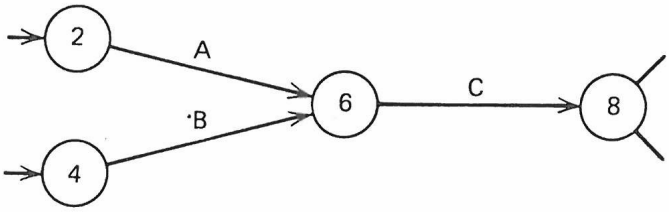

Activity C depends upon the completion of both Activities A and B

(d) A merge

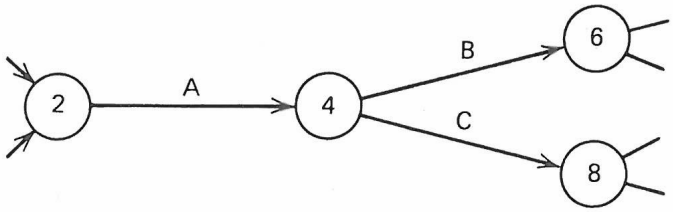

Activities B and C both depend upon the completion of Activity A

(e) A burst

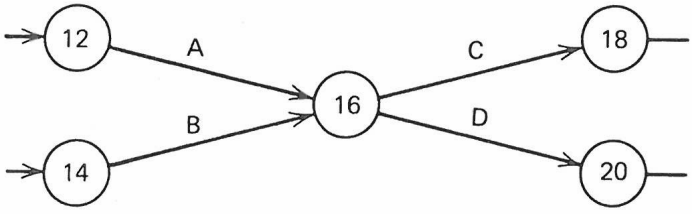

Activities C and D both depend upon the completion of Activities A and B

(f) A cross

Figure 3.1 Basic logic patterns for arrow diagrams.

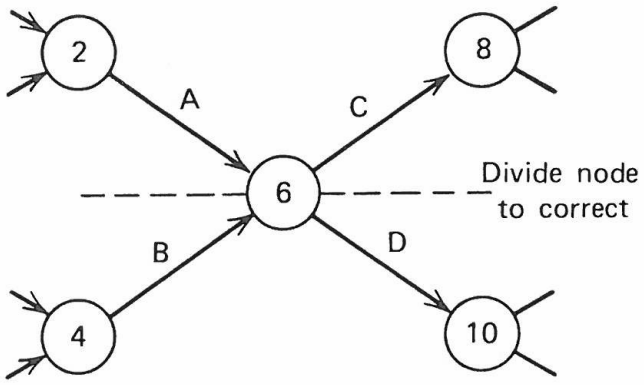

(a) Incorrect representation

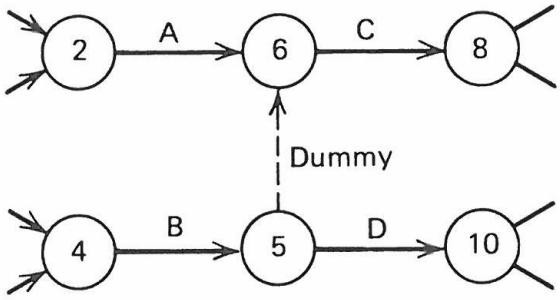

(b) Correct representation

Figure 3.2 ***The use of the dummy to define correct logic in an arrow diagram. (Required: Activity C depends upon Activities A and B. Activity D depends upon Activity B only.)***

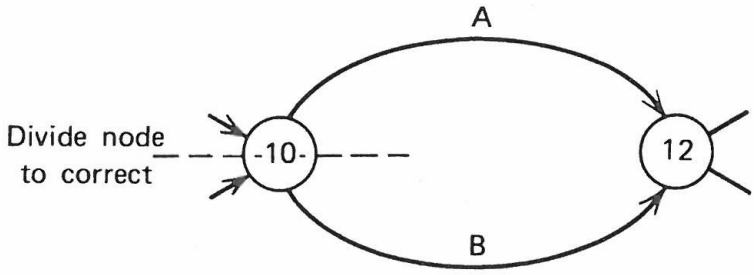

(a) Incorrect representation

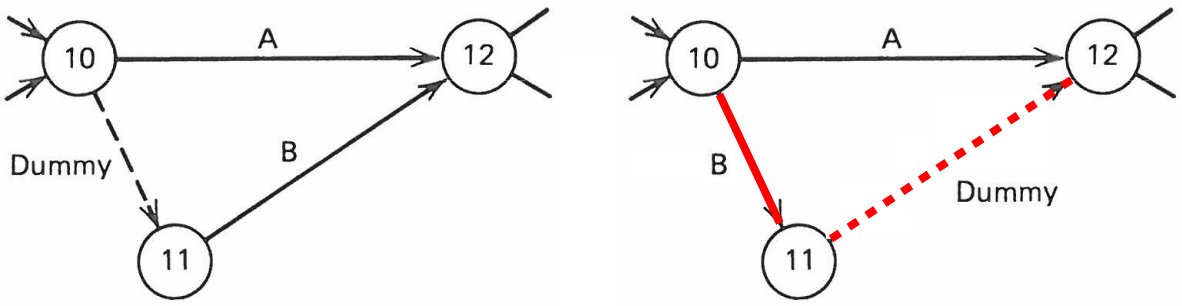

(b) Correct representation

Preferred (B may have FF, INDF) ***(B does not have FF, INDF)***

Figure 3.3 ***The use of the dummy to maintain unique numbering of activities.***

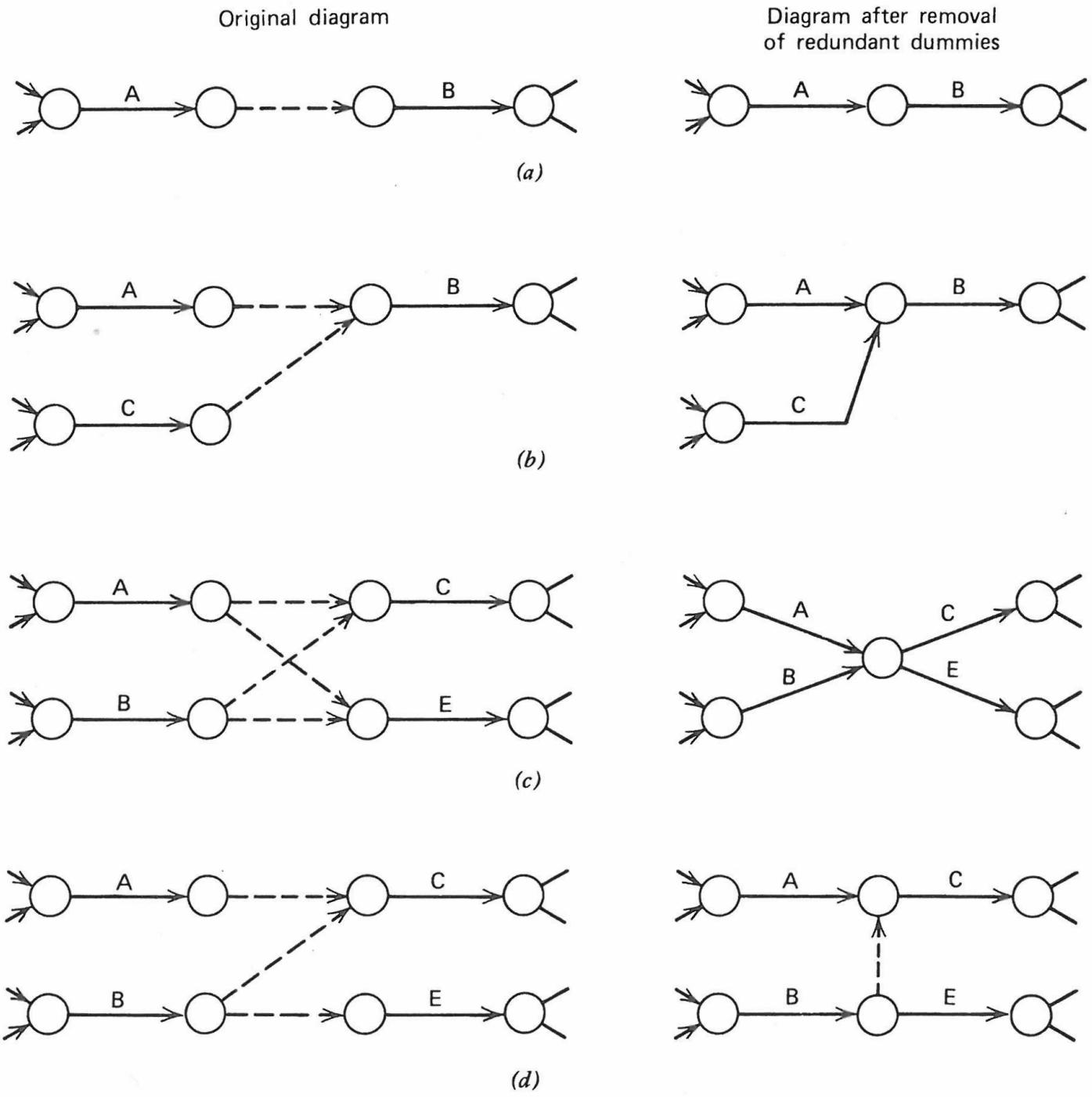

Figure 3.4 Removal of redundant dummies.

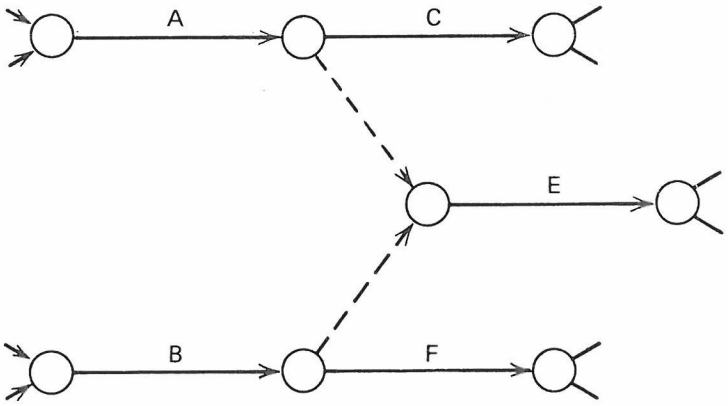

Figure 3.5

Both Dummies are necessary --- Cannot be removed

All networks should have:
a single beginning node, and
a single ending node.

Beginning node: has no predecessor nodes (e.g., 2, 4, 6).
Ending node: has no successor nodes (e.g., 12, 14, 16).

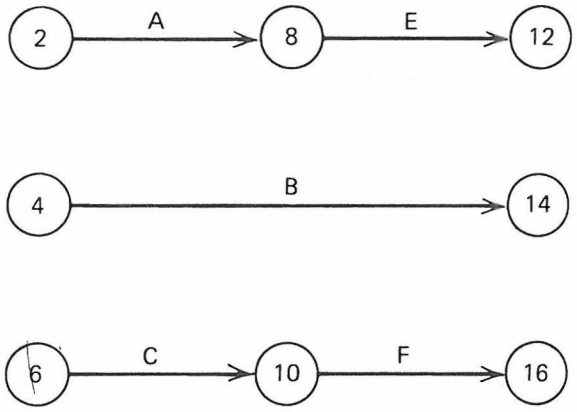

(a) Incorrect representation

This network has:
- Three beginning nodes (Events 2, 4, 6) and
- Three ending nodes (Events 12, 14, 16)

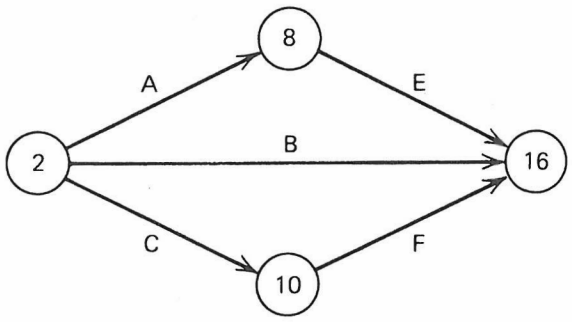

(b) Correct representation

Figure 3.6 Combining beginning and ending nodes.

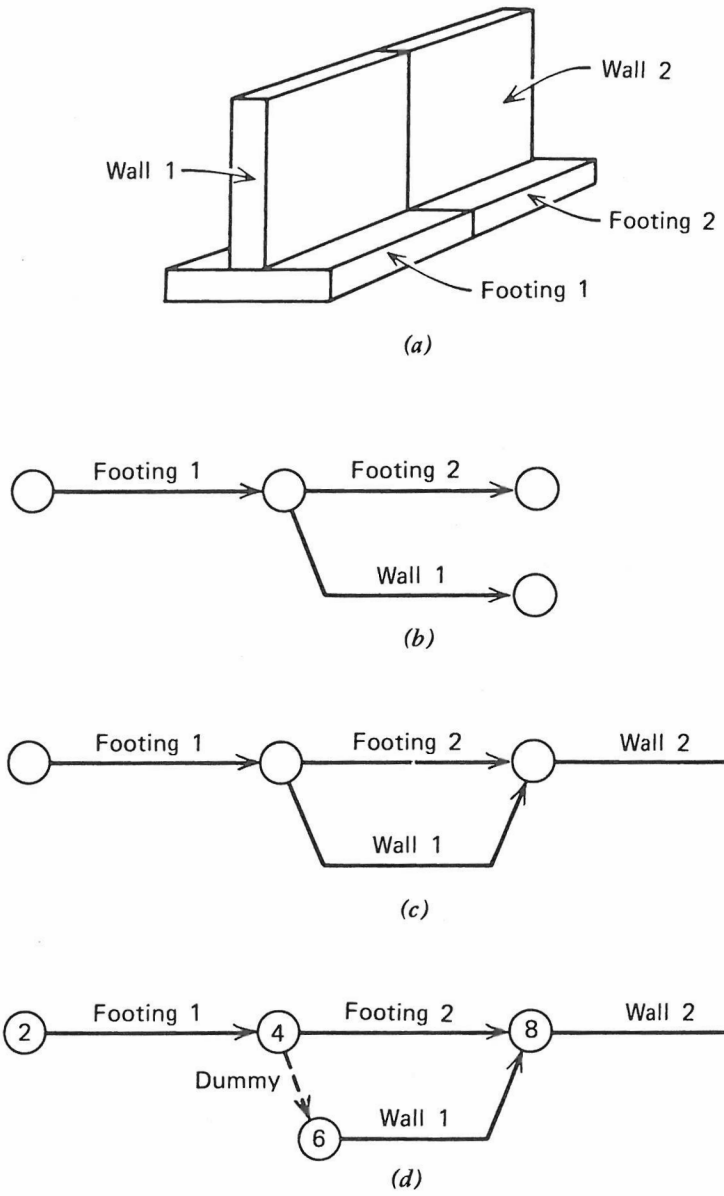

Figure 3.7 Retaining wall arrow diagram—start event approach.

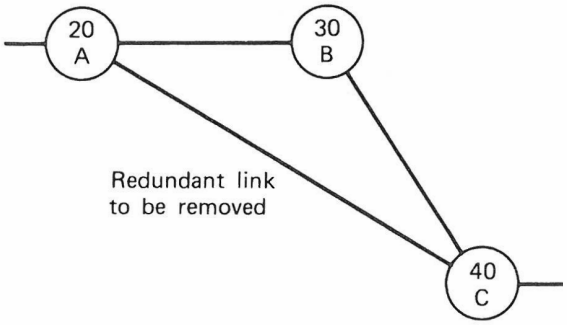

(a) Incorrect representation

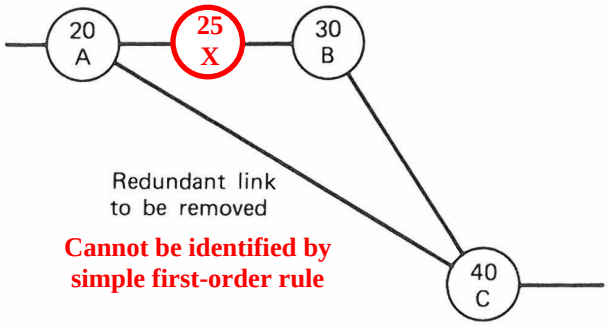

(a) Incorrect representation

TABLE 3.1

Activity List with Redundant Dependencies Removed—Remodeling Chemical Laboratory

Activity List		
No.	**Activity**	**Depends upon**
1	Strip room	—
2	Repair walls and ceiling	~~1~~, 5, 7
3	Repair floor	~~1~~, 5
4	Lay vinyl floor	~~3~~, 12, 13, 14
5	Rough-in plumbing and electrical	1
6	Finish plumbing and electrical	~~2~~, ~~3~~, ~~5~~, ~~9~~, 10, 11, 19
7	Replace existing fume duct	1
8	Install new fume hood	2, 3, 16
9	Install 1/3 base cabinets	~~2~~, ~~3~~, 8, 15
10	Install wall cabinets	2, 3, ~~7~~, 15
11	Install chemical sink	~~2~~, ~~3~~, ~~5~~, 9, 17
12	Paint cabinets	6, ~~8~~, ~~9~~, ~~10~~, ~~11~~, 18
13	Paint walls and ceiling	~~2~~, ~~3~~, 6, ~~8~~, ~~9~~, ~~10~~, 18
14	Obtain vinyl floor covering	—
15	Obtain cabinets	—
16	Obtain fume hood	—
17	Obtain chemical sink	—
18	Painter availability	—
19	Install 2/3 base cabinets	~~2~~, ~~3~~, 9, ~~15~~

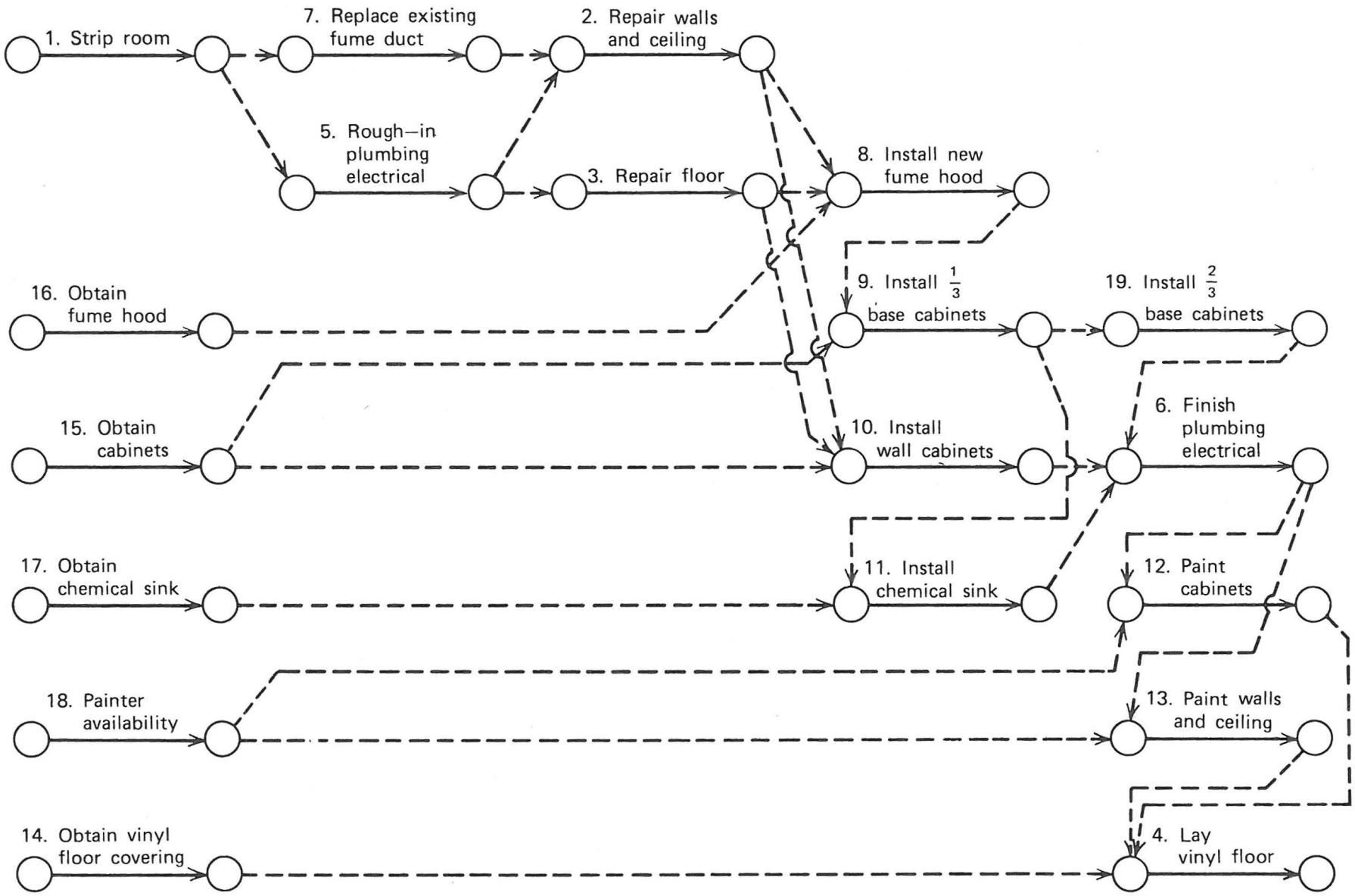

Figure 3.8 Preliminary arrow diagram—independent activity approach—remodeling chemical laboratory.

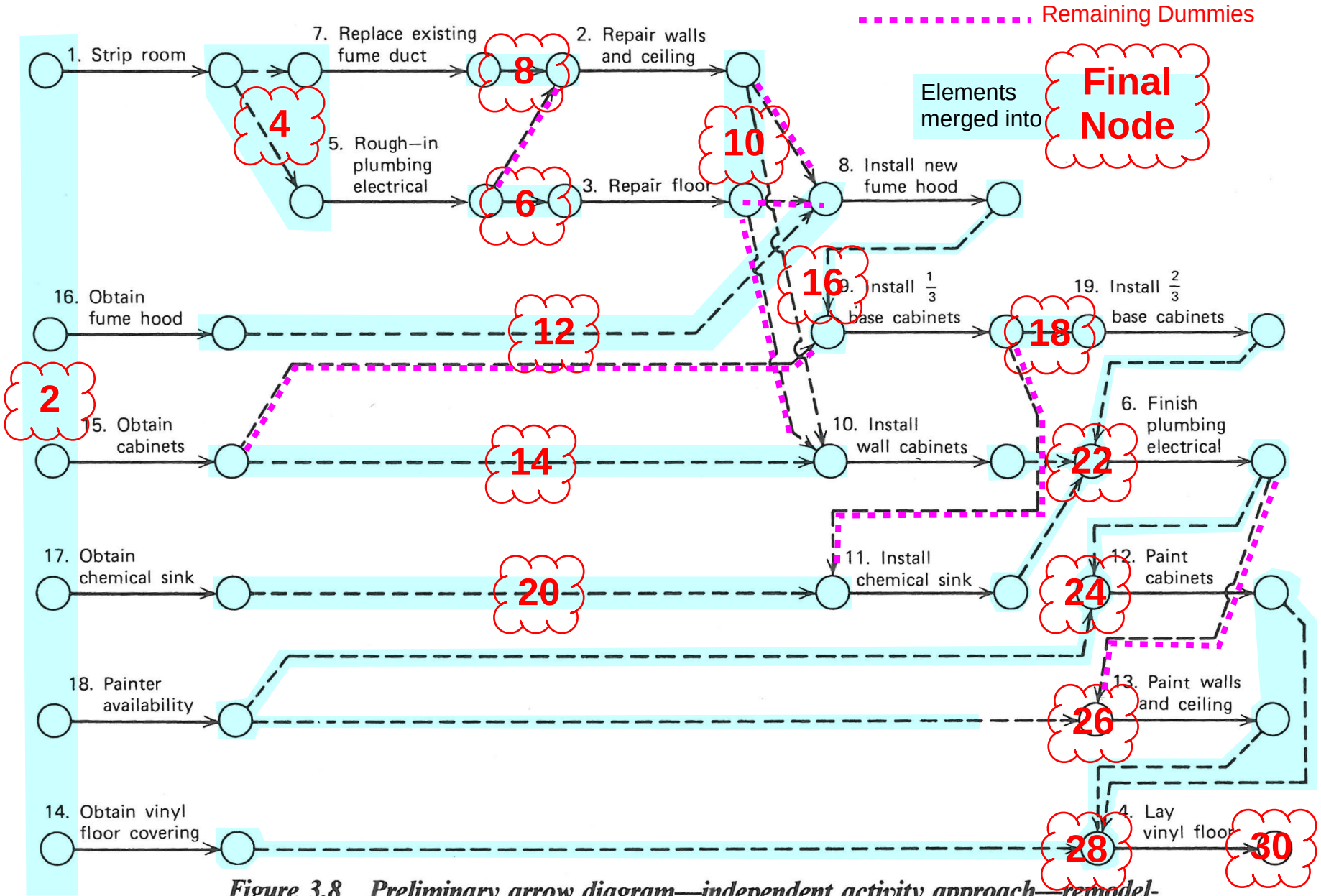

Figure 3.8 Preliminary arrow diagram—independent activity approach—remodeling chemical laboratory.

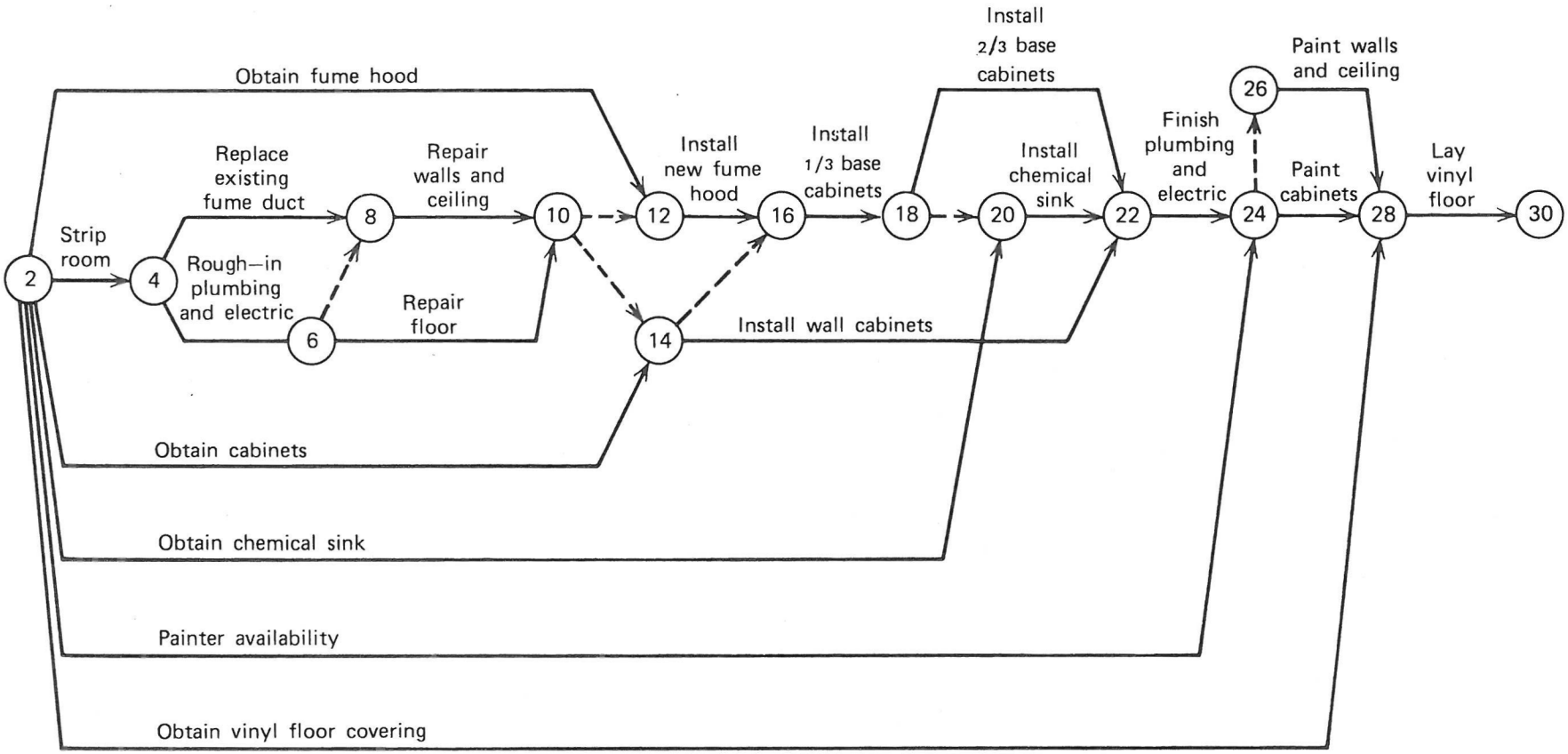

Figure 3.9 Arrow diagram—remodeling chemical laboratory.