Detroit Water and Sewerage Department

Wastewater Master Plan

DWSD Project No. CS-1314

Review of Collection System Regulators and Outfalls

Technical Memorandum
Original Date: April 29, 2002
Revision Date: June 25, 2003
Author: Tucker, Young, Jackson & Tull

Table of Contents

1. Executive Summary 1

2. Introduction 1

2.1 Purpose 1
2.2 Scope 1

3. Data Sources 5

3.1 Long Term CSO Plan (July 1, 1996) 5
3.3 PC-698 In-System Storage 5
3.4 CS-1329 In-System Storage 5
3.5 PC-744 Asset Audit Report 5
3.6 DWSD Operational Plan 5
3.7 DWSD CS-1281 Real Time Control Wastewater Collection System Operational Elements Data 6
3.8 PC-665 System-Wide Instrumentation and Control, Wastewater Collection System, Valve Remotes 6
3.9 DWSD Wastewater Collection System -Operation and Maintenance Manual. 6
3.10 CS-1158 Detroit Regulators Inspection, October 1992. 6
3.11 CS-1053 DWSD Sewer Outfall Inspection Report, Task Order No. 1, October 1988. 6

4. Collection System 6

4.1 Component Inventory 6
4.2 Component Rehabilitation/ Replacement Requirements and Recent and On-going Rehabilitation Work 8
4.3 Recommendations 9

Appendix A - Table and Figures 11

Appendix B - References 96

Review of Collection Systems Regulators and Outfalls

1. Executive Summary

The purpose of this Technical Memorandum is to summarize current information on collection system facilities for the Wastewater Master Plan. Three sets of tables for the existing collection system facilities are presented in this technical memorandum as follows:

- Facility Inventory
- Facility Deficiencies / Status of Recent and Currently Planned Improvements
- Recommended Future Improvements

The collection system components to be listed in each of the above tables are as follows:

- Outfall Flow Regulators
- Outfalls
- Backwater Gates
- Outfall Diversion Dams
- In-System Storage Devices and System Gates

The above collection system inventory tables were summarized by component type, district and age categories as shown in Table 1.1. Most of these system components are in the 25 to 75 year old range.

The existing rehabilitation/ replacement requirements of sewer system components are rated as long-term, mid-term, short-term and inspection needed as defined below:

- Long-term Functional component with no repairs required.
- Mid-term Functional component with some minor repairs required.
- Short-term Reported Non-functional components or functional components with significant repairs required.
- Inspection Needed Inspection required on facilities, which have not been inspected within the last 10-15 years.

Short-term, mid-term and long-term repairs need to be completed within 5 years, 10 years and 15 years, respectively.

As can be seen in Table 1.2 nearly all of the outfall flow regulators are in good condition and do not require short or mid-term rehabilitation. A majority of the outfalls are in good condition, except for the Central District where half the outfalls require short and mid-term rehabilitation. A majority of the backwater gates, outfall diversion dams and in-system storage devices and system gates are in good condition and only require long-term routine inspection.

The maintenance related collection system replacement, rehabilitation and maintenance cost by system component are presented in Volume 4 of the Wastewater Master Plan.

A general guide for inspection and capital improvement for the system component replacement and rehabilitation intervals is given below:

	Recommended Interval		
	Inspection Years	Replacement Years	Rehabilitation Years
Outfall Flow Regulators	5	30	15
Outfalls	5	150	50
Backwater Gates	1	50	10
Outfall Diversion Dams	1	50	10
In-System Storage Devices & System Gates	1	30	10

Facilities with moving parts such as flow regulators, backwater gates and in-system storage devices should be visually inspected, at least quarterly, during routine sewer inspections. These inspections are best performed in the summer and fall when the weather is not usually cold or rainy. Additionally, inspections should occur after large storm events (Large local area rainfalls of 1-inch or greater or general overall rainfall of 0.5 inches or greater).

2. Introduction

2.1 Purpose

The purpose of this Technical Memorandum is to summarize current information on Collection System Facilities for the Wastewater Master Plan.

Three sets of tables for the existing collection system facilities are presented in this technical memorandum as follows:

- Facility Inventory
- Facility Deficiencies / Status of Recent and Currently Planned Improvements
- Recommended Future Improvements

2.2 Scope

All wastewater collection system components covered in this technical memorandum deal with DWSD-owned facilities.

The scope of this Technical Memorandum includes collection system components such as flow regulators, outfalls, backwater gates, outfall diversion dams and in-system storage devices and system gates.

This technical memorandum first provides the collection system component inventory followed by component deficiencies with a listing of recent and ongoing work to correct these deficiencies. All remaining future work is listed and prioritized. Work items are given scheduled completion dates based on priority categories.

Table 1.2 System Component Inspection Results Summary

System Components	District	No.	Rehabilitation/Replacement Requirements		
			Long-term	Mid-term	Short-term
Outfall Flow Regulators	Central	40			3
	East Jefferson	1			
	Subtotal	41			3
Outfalls	Rouge River	22	4	2	2
	City of Dearborn	1			
	Oakwood	4			
	Central	50	15	1	4
	East Jefferson	4	1		1
	Subtotal	81	20	3	7
Backwater Gates*	Rouge River	25			
	City of Dearborn	1			
	Oakwood District	3			
	Central District	23			
	East Jefferson	2			
	Subtotal	54			
Outfall Diversion Dams	Rouge River	23			
	Oakwood	1			
	Central	31			3
	Subtotal	55			3
In-System Storage Devices & System Gates	Rouge River	9	1		
	Southfield	1			
	City of Dearborn	2			
	Baby Creek	6			
	Central	21		1	2
	East Jefferson	1			
	Subtotal	40	1	1	2

*Information regarding rehabilitation needs was not available at the time of release of this report.

3. Data Sources

A large portion of the information collected is obtained from the City of Detroit Long Term CSO Plan for the Detroit and Rouge Rivers (July 1, 1996). Other sources of data are listed in Appendix B.

3.1 Long Term CSO Plan (July 1, 1996)

A significant portion of the Long Term CSO Plan was Section 10.06 Collection System Rehabilitation. This Section identifies existing conditions, rehabilitation requirements, rehabilitation design and costs and an implementation schedule for the collection system. Many collection system components were inspected under the CSO Long Term Program. This report is a major source of information for this technical memorandum.

3.2 PC-695 Regulators / Remote Flow Control Structures and Dam Rehabilitation

This project was initiated and designed under Task 2 and 3 of CS-1158, Long Term CSO Plan. This project consisted of the rehabilitation of 40 individual flow regulator sites and was completed in 1998.

3.3 PC-698 In-System Storage

This project was initiated and designed under Task 2 of CS-1158, Long Term CSO Plan. This project consisted of the construction of 7 slide gates in existing rehabilitated backwater gate structures along the east side of the Rouge River (these gates are known as "Task 1 Gates"). This project was completed in 2000.

3.4 CS-1329 In-System Storage

This project is currently under design and consists of the installation of 13 collection system in-system storage facilities. The construction of this project is to be completed under Contract PC-747 by December 2004.

3.5 PC-744 Asset Audit Report

The purpose of this report is to assess the current and projected operational status of all significant WWTP and Wastewater Collection System Components, their state of repair, and their projected major maintenance and replacement status.

In Section 4.2, Collection System Asset Listing, Table 4-3 lists new gates for the Upper Rouge In-System Storage Gate facility and Collection In-System Regulator Gates (Gates and Inflatable Dams).

3.6 DWSD Operational Plan

The Operational Plan was published in 1994 and contains a system description including service districts, major interceptors, backwater gates, regulators and diversion chambers, fabridams and remote controlled valves. This plan is updated each year.

3.7 DWSD CS-1281 Real Time Control Wastewater Collection System Operational Elements Data

The purpose of the Real Time Control Work Group in CS-1281 is to inventory all Wastewater Collection System components and to develop collection system guiding principles, strategies and operational protocols. Existing and currently planned and recommended operational elements were inventoried in March 2001. These reports contain maps locating all of the operational elements of the collection system.

3.8 PC-665 System-Wide Instrumentation and Control, Wastewater Collection System, Valve Remotes

The purpose of this contract is to inventory and rehabilitate the existing wastewater collection system's component instrumentation. Therefore, many of the work products list existing collection system components.

3.9 DWSD Wastewater Collection System -Operation and Maintenance Manual.

The Wastewater Collection System covers the system districts, major interceptors, regulators and overflow structures, fabridams, outfalls and backwater gates. Each outfall and flow regulator site is shown in a schematic drawing.

3.10 CS-1158 Detroit Regulators Inspection, October 1992.

In October 1992, Water Control Systems Limited produced a report under CS-1158, discussing their inspection of 78 outfalls.

3.11 CS-1053 DWSD Sewer Outfall Inspection Report, Task Order No. 1, October 1988.

In 1988, 8 outfalls were inspected by Townsend and Bottum Services Group in Association with Wade Trim / Associates, Inc.

4. Collection System

First, a Wastewater Collection System component inventory is presented. Second, the component deficiencies are listed with recent and on-going work identified which correct the listed deficiencies. Third, recommendations are made to correct the remaining deficiencies.

4.1 Component Inventory

The components included herein are flow regulators, outfalls, backwater gates, outfall diversion dams and in-system storage devices and system gates. These components are organized by Detroit Sewer Districts and presented in tables herein.

4.1.1 Outfall Flow Regulators

There are 41 flow regulator locations, which are listed in Table 4.1.1 and shown in Figure 4.1. Flow regulators are flow control devices that control flow from trunk sewers into interceptors based on the wastewater level in the receiving interceptor. Most of the diversion and combined sewer regulator structures are located along the Detroit and Rouge rivers. These regulating structures were designed to divert sanitary flow during dry weather conditions and combined sanitary and storm flow, during storm weather conditions. During storm weather conditions, combined storm and sanitary flow from trunk sewers is diverted partially to an interceptor and the rest to river outfalls. There are two types of mechanical float regulatory assemblies used within the Detroit collection system: the Brown and Brown (B&B) regulator and the McNulty regulator. Most of these regulators have been replaced with hydraulic slide gates. Figure 4.2 shows a typical regulator structure, prior to the installation of hydraulic actuated slide gates.

4.1.2 Outfalls

Eighty-one outfalls are listed in Table 4.1.2 and shown in Figure 4.3. Outfall sewers are sewers leading from flow regulators and/ or dams to the Detroit or Rouge rivers. Two outfalls serve the WWTP. Outfall Sewers carry CSOs during certain wet weather periods and discharge into the Detroit and Rouge Rivers. The outfall designation "B" refers to gravity outfalls, while "P" refers to outfalls associated with pumping stations.

4.1.3 Backwater Gates

Fifty-four backwater gates are listed in Table 4.1.3 and shown in Figure 4.4. Backwater gates are devices installed in the CSO outfalls along the Detroit and Rouge Rivers. The purpose of the backwater gates is to prevent water from the Detroit and Rouge Rivers from entering the DWSD collection system. The backwater gates are installed at the overflow side of each regulator (usually two sets of gates; a sewer gate and a river gate) and act as check valves when the river levels are higher than the invert elevations of the outfalls.

4.1.4 Outfall Diversion Dams

There are 55 dams listed in Table 4.1.4 and shown in Figure 4.5. Outfall dams are located in the outfall barrel between the diversion chamber or regulator structures and the river to intercept combined wastewater flows from flowing into the rivers and to prevent river water from entering the collection system. At locations where rivers could rise higher than dam elevations, backwater gates were added to allow CSO flow into the river, but prevent river water from flowing into the sewer. Most dams are fixed concrete construction.

In the 1980s, some of the dam elevations were raised by installing wooden flashboards to further elevate the dam height, and therefore, increase flow in the interceptors.

4.1.5 In-System Storage Devices and System Gates

There are 40 in-system storage devices and system gates listed in Table 4.1.5 and shown in Figure 4.6.

Seven In-System Storage Gates along the Rouge River (Task 1 Gates): DWSD constructed seven facilities for seven CSO outfalls along the east side of the rouge River per Contract No. PC-698, in 2000. The slide gates were installed in existing rehabilitated backwater gate structures. These new gates replaced twelve existing backwater gates. The function of the new gates is to create storage in upstream outfall and to regulate flow into the Northwest interceptor. They are labeled B-56 to B-81 in Table 4.1.5.

System Gates: There are 17 valve remotes (VR) within the collection system. They have VR identification numbers (VR1 to VR17). The following valve remotes were removed from Remote Operation: VR1, VR2, V31, VR4, VR5, VR6, VR7, VR10, VR12, and VR14. They operate in manual operation only.

New In-System Storage Devices (I.S.S.D.): These proposed I.S.S.D, under CS-1329, will be installed in the near future. The total number of these devices is 13. DWSD is constructing these I.S.S.D. to maximize storage within the collection system during the wet weather operation. They are labeled ISD002 to ISD014 in Table 4.1.5.

Existing In-System Storage Devices. There are 3 existing I.S.S.D. All are inflatable dams. The most recent dam was installed in 2001 at the Dubois Sewer as a part of the St. Aubin Screening and Disinfection Facility. They are listed under the central district as LR-2, HUB-1 and unlabeled site (Dubois and Atwater)

4.2 Component Rehabilitation/Replacement Requirements and Recent and On-going Rehabilitation Work

4.2.1 Outfall Flow Regulators

Table 4.2.1 lists 41 outfall flow regulators with deficiencies, and, of these, 37 regulators were rehabilitated under PC-695 in 1998. These regulators were inspected and reports written on their inspection under CS-1158 in 1992 and 1993. A summary of these report results is given in Appendix A.

4.2.2 Outfalls

Table 4.2.2 lists the inspection result deficiencies of 42 Outfalls. These outfalls were inspected under both Contract CS-1053 in 1988 and Contract CS-1158 in 1995. Outfalls have been repaired under DWSD contracts. Three outfalls were repaired when slide gates were installed under Contract PC-698 in 2000. Three outfalls were also repaired under Contract PC-731 Leib / St. Aubin Screening and Disinfection Facility in 2000. The Conner Creek Outfall is having sediment removed under Contract PC-739 Conner Creek Pilot CSO Control Facility by the year 2005.

A new WWTP Detroit River outfall (DRO-2) is currently under construction and will be completed in April 2003.

Three other outfalls have been repaired through other DWSD Maintenance Contracts.

4.2.3 Backwater Gates

Table 4.2.3 lists 26 backwater gates with deficiencies. These gates were inspected in 1992 and 1995 under Contract CS-1158. The recent repairs by DWSD had not been acquired as of the time of printing this report.

4.2.4 Outfall Diversion Dams

Table 4.2.4 lists 3 diversion dams with deficiencies. These dams were inspected with the outfall flow regulators in 1992.

4.2.5 In-System Storage Devices and System Gates Deficiencies

Table 4.2.5 lists 10 devices and gates with deficiencies. Seven of these devices and gates were rehabilitated under Contract PC-695 in the year 1998.

There is no record for the inspection of the facilities, which were rehabilitated under Contract PC-695 in 1998, except the inflatable fabridam (LR-2) located at Livernois and Ranspatch. This dam was inspected in 1992 as a part of regulator inspections and was non-functional at that time. The Hubbell-Southfield inflatable fabridams (HUB-1) were inspected by the CSO team in 1994. Inspection indicated that dams are generally in good condition with little or no maintenance done in the previous five years. Table 4.2.5 shows facilities which were rehabilitated in 1998 and descriptions of work performed on these facilities under Contract PC-695.

4.3 Recommendations

This section includes deficiencies, which need to be repaired and are not covered by recent and on-going work. Priorities are assigned to these recommended remaining work items.

4.3.1 Flow Regulators

Table 4.3.1 lists 3 flow regulators that have been recommended for rehabilitation. Additionally, the inspection of B-1 is required.

4.3.2 Outfalls

Table 4.3.2 lists 30 outfalls that have been recommended for rehabilitation. The priorities shown are divided into near term, mid term, and long term categories.

4.3.3 Backwater Gates

Table 4.3.3 is not shown because the DWSD maintenance recent improvements had not been received as of the time of printing this report.

4.3.4 Outfall Diversion Dams

Table 4.3.4 list 3 diversion dams that need to be rehabilitated.

4.3.5 In-System Storage Devices ad System Gates.

Table 4.3.5 list 4 sites to be rehabilitated.

Appendix A - Tables and Figures

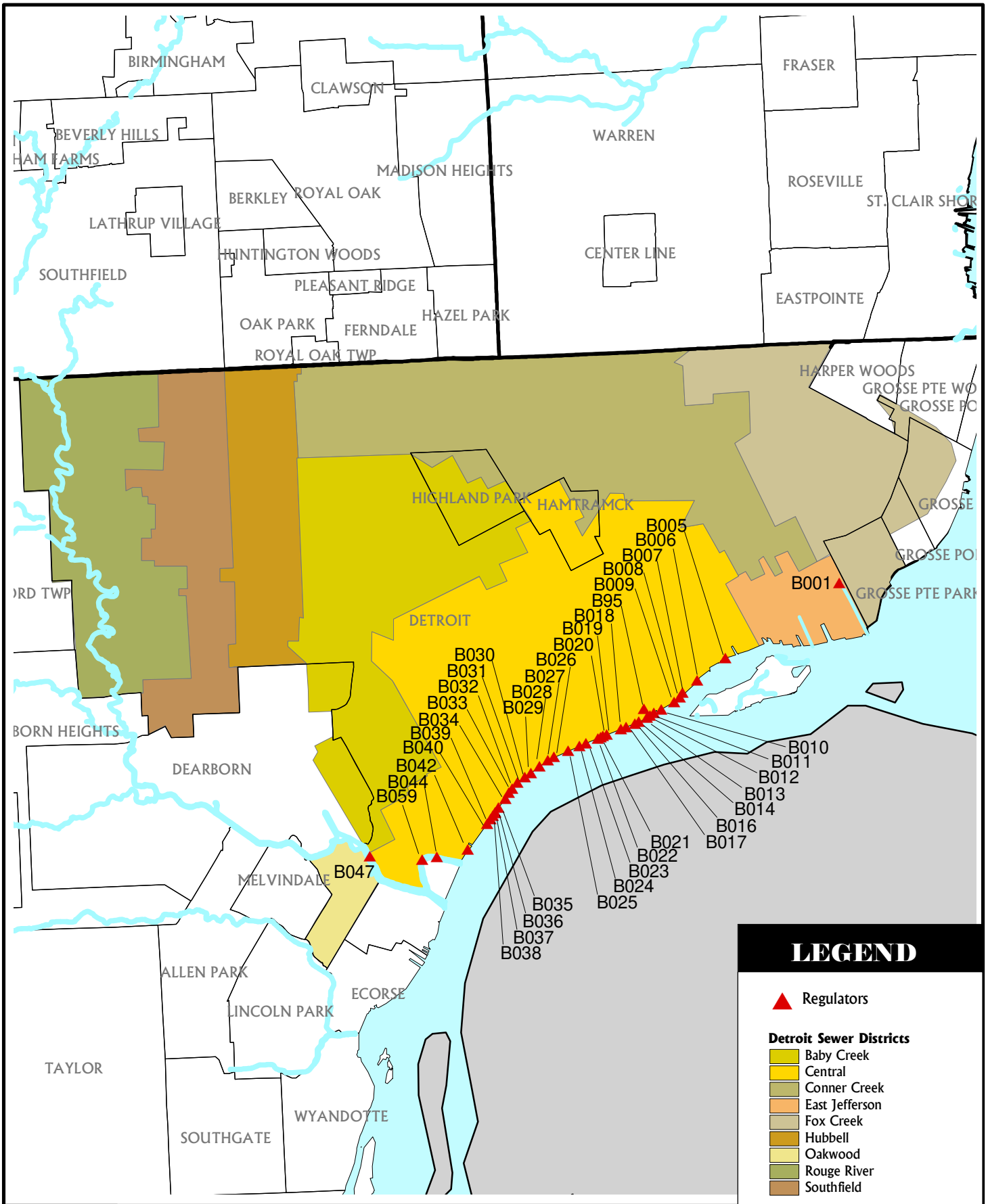

April 16, 2002

CS-1314 DWSD Wastewater Master Plan

CDM

0 0.5 1 1.5 2 2.5 Miles

Control Structures--Regulators

DWSD-A-076b

Source: Control Structures digitized using maps & location descriptions form DWSD 'Operational Plan' Aug.93
Basemap layers obtained from MGF,

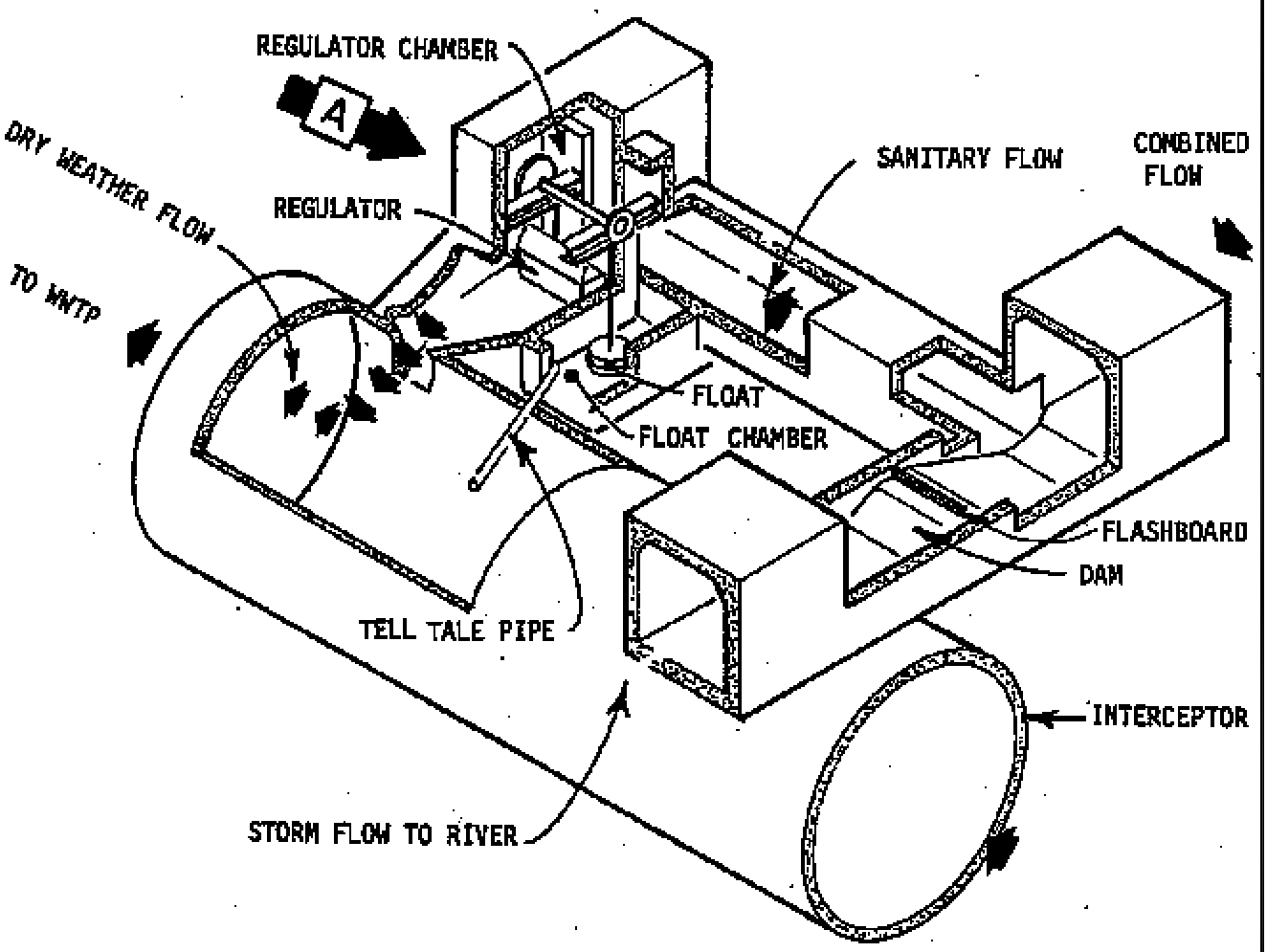

Detroit Wastewater Collection System
Figure 4.2
TYPICAL REGULATOR STRUCTURE
(Prior to Installation of Hydraculic Actuated Slide Gates)

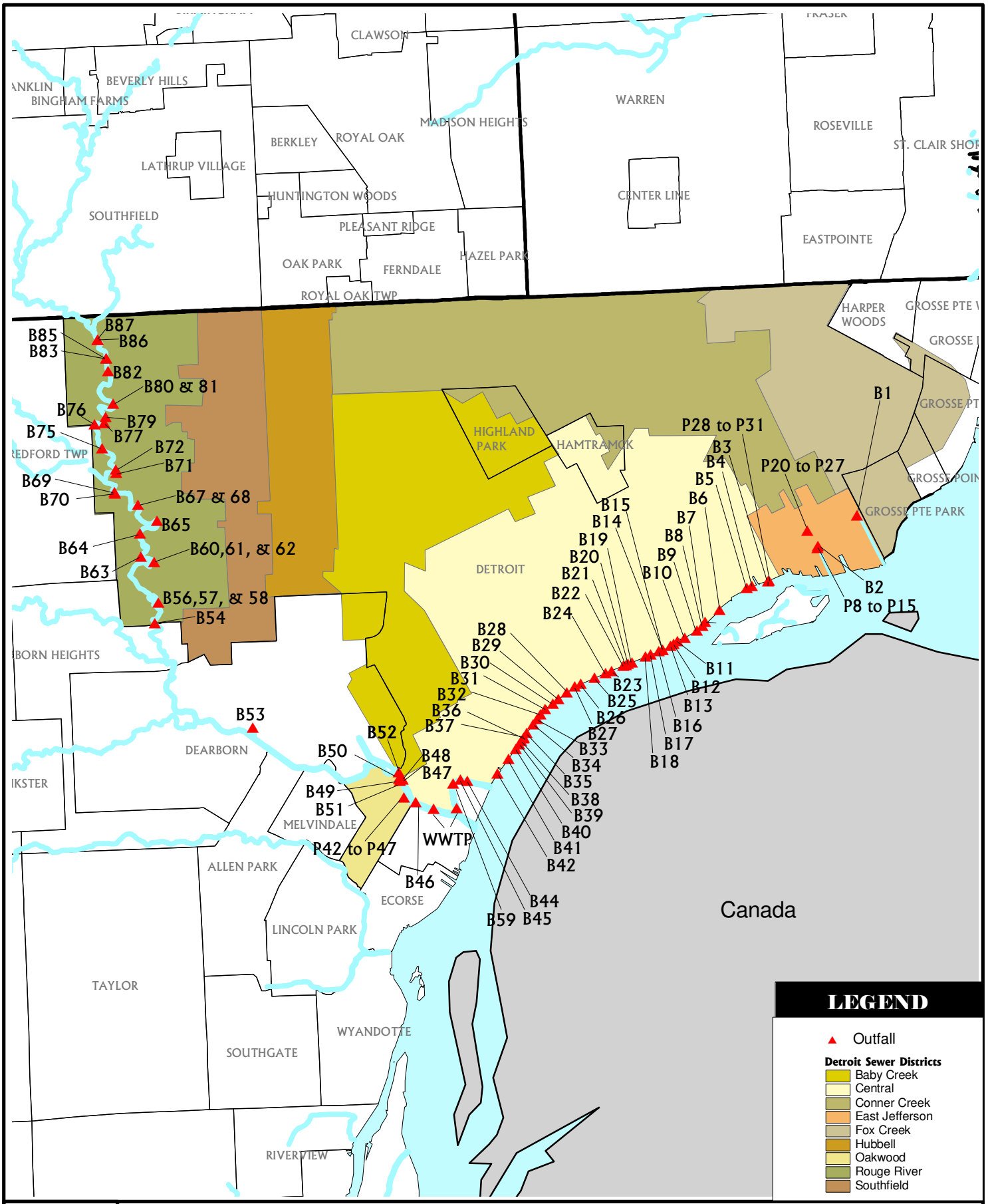

April 16, 2002

CS-1314 DWSD Wastewater Master Plan

CDM

N

0 0.5 1 1.5 2 Miles

Outfalls

DWSD-A-028B

Source: Outfalls digitized using maps & location descriptions form DWSD 'Operational Plan' Aug.'93
Basemap layers obtained from MGF,

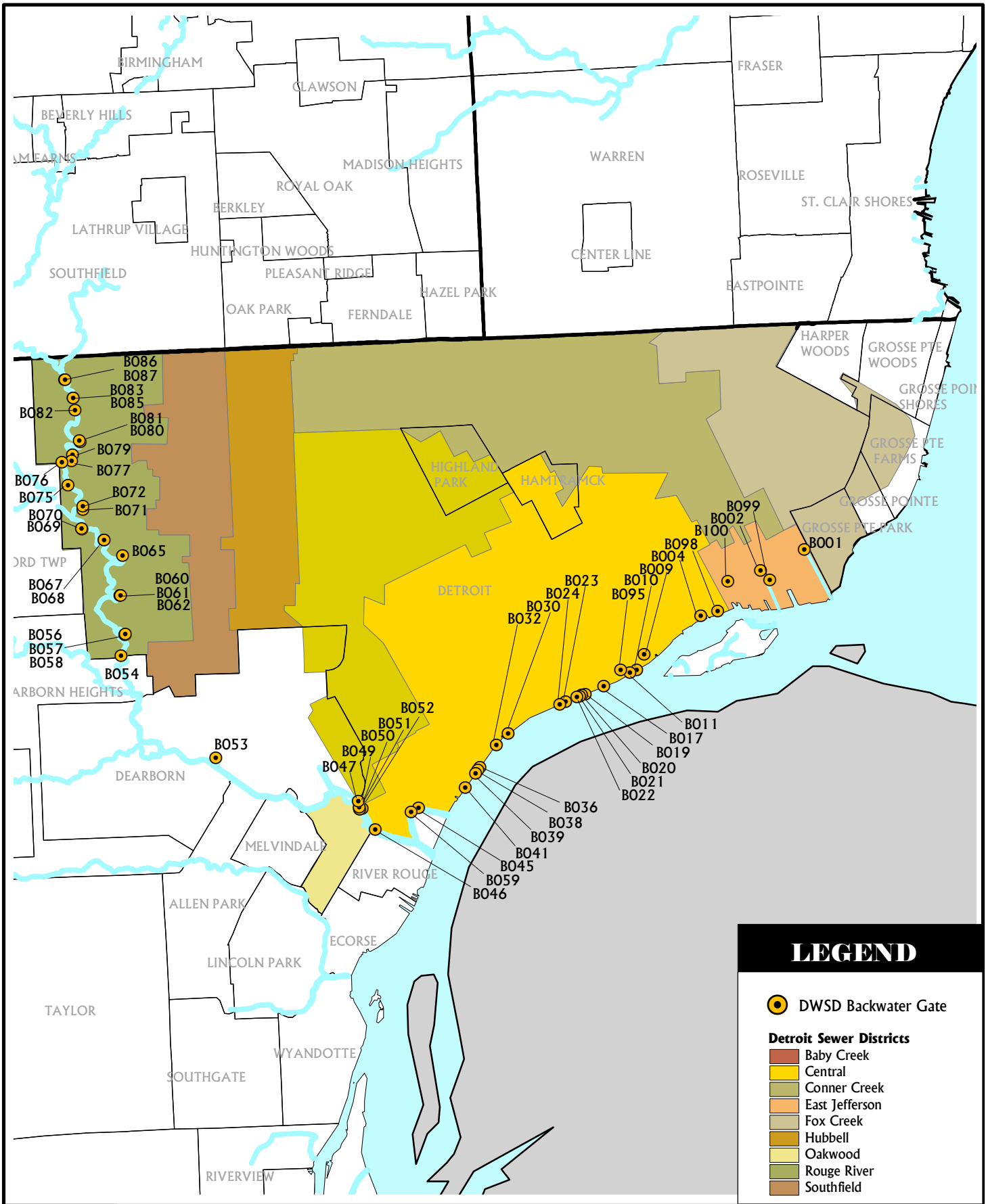

April 16, 2002

CS-1314 DWSD Wastewater Master Plan

CDM

N

0 0.5 1 1.5 2 2.5 Miles

Control Structures--Backwater Gates

DWSD-A-076d

Source: Control Structures digitized using maps & location descriptions form DWSD 'Operational Plan' Aug.'93
Basemap layers obtained from MGF,

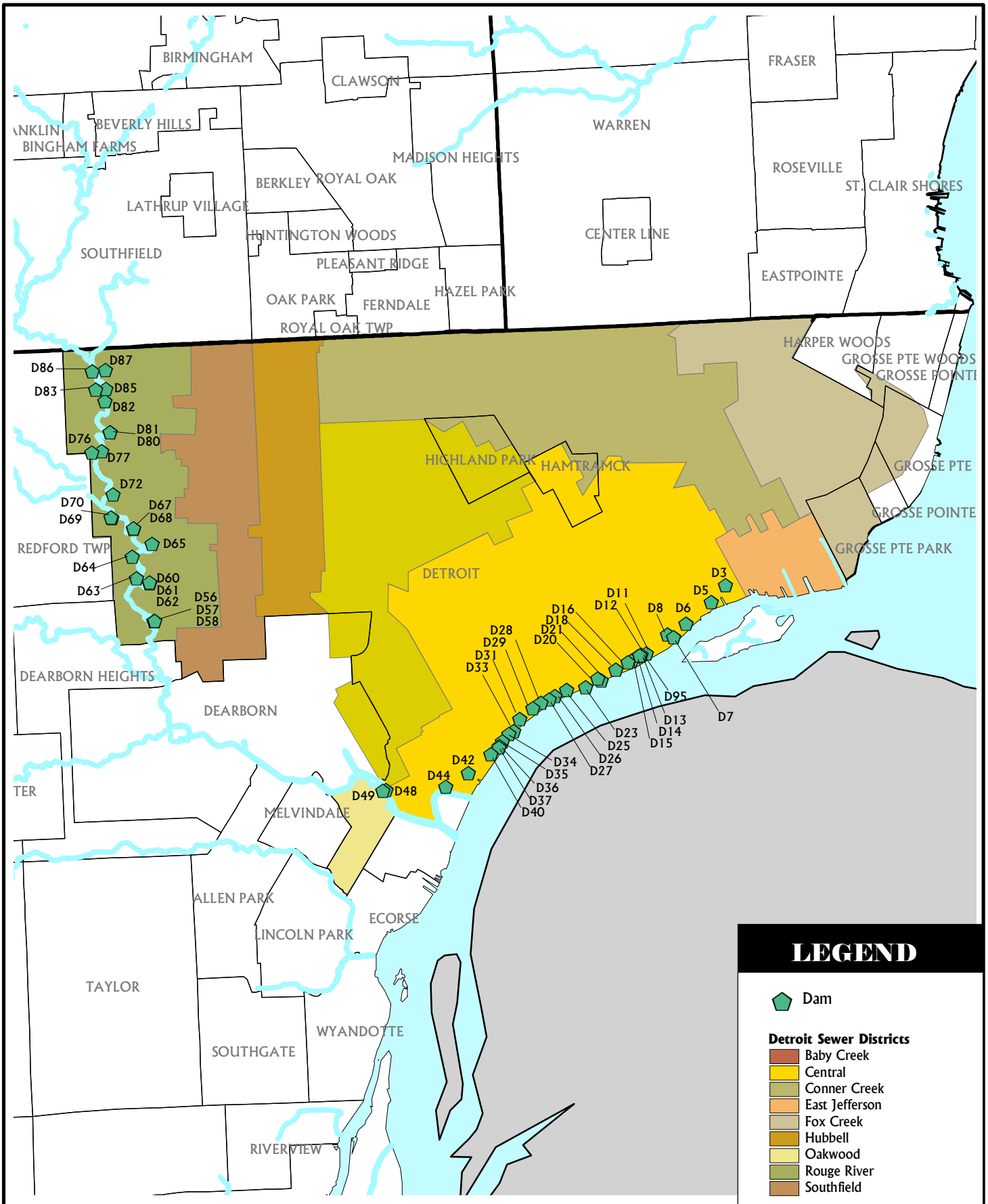

April 16, 2002

CS-1314 DWSD Wastewater Master Plan

N

0 0.5 1 1.5 2 2.5 Miles

Control Structures--Dams

DWSD-A-076a

Source: Control Structures digitized using maps & location descriptions form DWSD 'Operational Plan' Aug.93
Basemap layers obtained from MGF,

					Outfall Dimensions							Backwater Gates					
	MDEQ	Outfall	Year		Material/		Downstream		Up-stream	Weir Crest	Flash board			Sill	Stop	Sensing	
Outfall ID #	Permit No.	Location	Built	Sewer	Shape	Size	Length	Invert	Invert	Eleva-tion	Eleva-tion	Number	Size	Eleva-tion	Logs	Device	Remarks
B69	067	Jeffries FWY. And Rouge River (W.Parkway)	1970	W. Parkway	Concrete/Box	12'-0" x 4'-0"	24.1	110.00	121.63	124.28					Yes	Level Sensor	
B70	066	Schoolcraft & Jeffries (Service Drive)	1970	Schoolcraft Siphon	Concrete/Cylinder	4'-6"	60	109.00	122.70	124.70					Yes	Level Sensor	
B71	068	Ray & Brammell	1954	Brammell	Clay/Cylinder	15"	52	119.83	121.71			1	15" tide gate	121.86	(C)	Level Sensor	
B72	069	Lyndon & Brammell	1928	Lyndon-Brammell	Concrete/Cylinder	12'-0"	277	111.60	111.80	118.00		2	8'-0" X 10'-6"	116.46	None	(C)	Slide gates installed PC - 698
B75	070	Fenkell & Rouge River	1963	Fenkell Siphon	Concrete/Cylinder	2'-0"	92	119.98	119.36	126.97					(C)	Level Sensor & Proximity Switch	Eliminated due to basin
						2'-6"	64	117.25	117.93								
B76	071	Puritan & Rouge River	1964	Puritan (west)	Concrete/Box	2 @ 9'-6" X 10'-3"	13.5	118.19	118.19			2	6'-6" X 6'-6"	119.19	(C)	Level Sensor	Eliminated due to basin
B77	072	Puritan & Riverdale	1971	Puritan (east)	Concrete/Cylinder	8'-0"	8.5	117.98	118.01	122.30		1	6'-0" X 10'-6"	122.30	None	Level Sensor & Proximity Switch	Slide gates installed PC – 698

					Outfall Dimensions							Backwater Gates					
	MDEQ	Outfall	Year		Material/		Downstream		Up-stream	Weir Crest	Flash board			Sill	Stop	Sensing	
Outfall ID #	Permit No.	Location	Built	Sewer	Shape	Size	Length	Invert	Invert	Eleva-tion	Eleva-tion	Number	Size	Eleva-tion	Logs	Device	Remarks
B79	073	Florence & Ridge (Riverdale)	1953	Riverdale	Concrete/Cylinder	15"	25	131.52	133.18						None	Level Sensor	
B80	074	McNichols & Rouge River (Beaverland)	1927	6 Mile Relief	Concrete/Box	3@11'-9" X 11'-0"	26.9	122.00	123.00	124.50		3	8'-0" X 9'-0"	123.00	None	Level Sensor & Proximity Switch	Slide gates installed PC - 698
B81	074	McNichols & Rouge River	1927	6 Mile Sewer	Concrete/Box	3 Box 9'-3" X 9'-3"	18	122.90	122.90	124.50		3	7'-0" X 7'-6"	123.90	None	(C)	Slide gates installed PC - 698
B82	075	Glenhurst & Rouge River	1950	Glenhurst	Concrete/Cylinder	2'-6"	23	123.20	127.84	129.10		1	2' tide gate	129.10	None	(C)	
B83	076	7 Mile & Shiawassee (West)	1972	7 Mile (west)	Concrete/Cylinder	9'-3"	890	122.60	123.57	125.74		1	8'-0" X 10'-6"	125.74	(C)	Level Sensor & Proximity Switch	Eliminated due to basin
B85	077	7 Mile & Berg	1971	7 Mile (east)	Concrete/Cylinder	8'-6"	230	124.60	127.80	131.00		1	8'-0" X 10'-6"	131.00	None	Level Transmitter and Proximity Switch	
B86	078	Frisbee & Shiawassee	1960	Pembroke	Concrete/Box	7'-0" X 9'-0"	208	124.00	127.50	131.08		1	6'-0" X 10'-6"	128.50	(C)	Level Transmitter	Eliminated due to basin
B87	079	Frisbee & Berg	1929	Frisbee	Concrete/Box	2 BBL. @ 8'-0" X 8'-0"	467	124.60	126.47			3	6'-0" X 10'-6"	127.49	None	Level Transmitter	
					Cylinder	10'-9"	800	126.60	129.81	132.50							

					Outfall Dimensions							Backwater Gates					
	MDEQ	Outfall	Year		Material/		Downstream		Up-stream	Weir Crest	Flash board			Sill	Stop	Sensing	
Outfall ID #	Permit No.	Location	Built	Sewer	Shape	Size	Length	Invert	Invert	Eleva-tion	Eleva-tion	Number	Size	Eleva-tion	Logs	Device	Remarks
CITY OF DEARBORN																	
B53	058	Hubbell & Southfield	1948	Hub - S'field	Concrete/Box	2 @14'-6" X 12'-0"	1744	91.25	92.00			8	9'-0" X 10'-6"	92.00	(C)	Proximity Switch	Eliminated due to basin
OAKWOOD DISTRICT																	
P42 TO P47	082	Oakwood Pump Station	(C)	(C)	(C)	1@ 11' X 7'	470	(C)	(C)	(C)		(C)			(C)	(C)	
B49	056	Fort at Rouge River, West Side	1921	(C)	Concrete										None	Level Sensor	
B50	(C)	N Fort	1951	Fort	Box	10'-6" X 8'-6"	70	85.50	85.50			2	9'-0" X 10'-6"	87 & 86		(C)	
B51	054	Fort & Bayside (South)	1920(B)	(C)	Concrete										Yes	Level Sensor & Proximity Switch	
CENTRAL DISTRICT																	
P28 TO P31	004	Fairview Pump Station	1929	(C)	(C)	(C)	300	(C)	(C)	(C)		(C)			(C)	(C)	
B3	005	McClellan & Jefferson	1927	McClellan	Brick/Cylinder	6'-3"	136	94.04	95.05	98.00					(C)	(C)	
					Arch	4'-9" X 4'-8"	2409	86.07	94.30								
					Arch	4'-9" X 5'-0"	2409	86.07	94.30								
				Cadillac	Cylinder	5'-9"	63	94.04	95.17	98.50							
					Arch	4'-9" X 4'-4"	2393	86.07	94.28								
					Arch	4'-9" X 4'-8"	2393	86.07	94.28								

					Outfall Dimensions							Backwater Gates					
	MDEQ	Outfall	Year		Material/		Downstream		Up-stream	Weir Crest	Flash board			Sill	Stop	Sensing	
Outfall ID #	Permit No.	Location	Built	Sewer	Shape	Size	Length	Invert	Invert	Eleva-tion	Eleva-tion	Number	Size	Eleva-tion	Logs	Device	Remarks
B4	006	Fisher	1927	Fischer	Concrete/Cylinder	13' -9"	836	84.20	70.42						Yes	Proximity Switch	
					Box	3 BBL. @ 10'-6" X 11'-6"	600	84.00	84.20			6	8'-0" X 10'-6"	86.20			
B5	007	Iroquois & Jefferson	1894	Iroquois	Brick/Cylinder	6 @ 4'-8"	1019	92.47	95.00	98.00					None	(C)	
B6	008	Helen & Jefferson	1927	Helen	Brick/Cylinder	9'-0"	226	94.29	94.74	97.00	98.00				None	(C)	
					Cylinder	3 @ 5'-3"	475	93.70	94.29								
B7	009	Mt. Elliot & Jefferson	1914	Meldrum	Brick/Cylinder	4 @ 5'-0"	419	93.50	93.61	97.51					(C)	(C)	
					Cylinder	4 @ 5'-0"	230	93.72	94.19								
					Cylinder	9'-0"	733	94.23	95.30	97.76							
					Cylinder	9'-0"	300	95.01	95.30	97.75							
B8	010	Leib (Harbortown)	1953	Conant-Mt.Elliot	Concrete/Box	2 @ 10'-0" X 10'-6"	1473	86.40	89.35	96.20					(C)	Electrode	
B9	011	Adair & Franklin	1895	Adair	Brick/Cylinder	5'-0"	1249	90.39	92.10	93.50		2	4'-0" X 6'-6"	92.40	Yes	Proximity Switch	
												2	4'-8" X 4'-4"	92.40			
B10	012	Joseph Campau & Franklin	1920	Jos Campau	Concrete/Box	3 BBL. @ 6'-0" X 8'-8"	741	90.60	91.59			6	6'-0" X 10'-6"	91.50	Yes	Proximity Switch	
B11	013	Chene & Franklin	1936	Chene	Brick & Concrete/Egg	5'-4" X 4'0"	270	94.70	94.90	95.50					(C)	Electrode	

					Outfall Dimensions							Backwater Gates					
	MDEQ	Outfall	Year		Material/		Downstream		Up-stream	Weir Crest	Flash board			Sill	Stop	Sensing	
Outfall ID #	Permit No.	Location	Built	Sewer	Shape	Size	Length	Invert	Invert	Eleva-tion	Eleva-tion	Number	Size	Eleva-tion	Logs	Device	Remarks
					Cylinder	2 @ 3'-8"	745	93.90	94.70			4	3'-7" X 3'-7"	93.70			
B12	014	Dubois & Franklin	1934	Dubois	Concrete& Brick/ Arch	5'-0" X 4'-9"	749	92.86	95.04	96.08	97.58				Yes	Electrode	
					Cylinder	4'-9"	749	92.86	95.04	96.08	97.58						
					Arch	5'-0" X 4'-9"	749	92.86	95.04	96.08	97.58						
					Arch	5'-0" X 4'-9"	286	93.83	92.86								
					Cylinder	4'-9"	286	93.83	92.86								
					Arch	5'-0" X 4'-9"	286	93.83	92.86								
B13	015	St. Aubin & Franklin	1921	St. Aubin	Brick/Egg	4'-8" X 3'6"	150	93.56	94.72	95.90	97.90				Yes	Electrode	
					Cylinder	5'-0"	730	90.68	93.56								
B14	016	Orleans & Franklin (West)	1930	Orleans	Brick/Cylinder	3'-0"	864	93.28	94.95	95.85	97.85				None	Electrode	
B15	017	Orleans & Franklin (Relief, East)	1967	Orleans Relief	Concrete/Box	5'-0" X 7'-0"		91.58	94.00	96.50					Yes	Electrode	
B16	018	Riopelle & Franklin	1885	Riopelle	Brick&Concrete/Cylinder	2 @ 3'-6"	900	93.50	96.86	97.86					None	Electrode	
					Arch	2 @ 3'-6" X 3'6"	64	93.50	93.50								
B17	019	Rivard & Franklin	1935	Rivard	Brick & Concrete/Oval	6'0" X 5'3"	630	89.00	92.10			2	6'-0" X 5'-6"	92.10	None	Proximity Switch	
					Arch	5'-0" X 5'-0"	149	89.00	89.00								
B18	020	Schweizer & Franklin	1856	Hastings	Brick & Concrete/Arch	3'-6" X 4'-4"	621	88.86	93.50	95.85	97.85				None	Electrode	

					Outfall Dimensions							Backwater Gates					
	MDEQ	Outfall	Year		Material/		Downstream		Up-stream	Weir Crest	Flash board			Sill	Stop	Sensing	
Outfall ID #	Permit No.	Location	Built	Sewer	Shape	Size	Length	Invert	Invert	Eleva-tion	Eleva-tion	Number	Size	Eleva-tion	Logs	Device	Remarks
B19	021	Randolph	1931	Randolph	Concrete & Brick/Cylinder	8'-0"	30	88.50	88.60			2	8'-0" X 7'-0"	88.60	Yes	Proximity Switch	
					Box	9'-6" X 6'-0"	270	87.00	88.50								
					Complex	8'-0" X 11'-1"	36	87.90	87.00								
					Cylinder	8'-0"	184	87.17	87.90								
					Arch	8'-0" X 8'-0"	45	87.54	87.17								
					Box	8'-0" X 8'-0"	115	88.57	87.54								
B20	022	Bates	1922	Bates	Concrete/Cylinder	13'-5"	280	90.00	84.20	90.00					(C)	Level Sensor Removed (6/26/78/)	
					Box	3 BBL. @ 6'-4" X 8'-6"	315	87.25	90.00	88.75		6	9'-0" X 7'-0"	88.25			
B21	023	Woodward & Jefferson	1890	Woodward	Brick/Box	8'-6" X 12'-0"	480	85.00	93.90				10'-0" X 12'-0"	90.00	(C)	Proximity Switch	
B22	024	Griswold & Woodward	1876	Griswold	Concrete & Bricks Cylinder	7'-0"	364	89.30	89.30	90.80		2	8'-6" X 10'-0"	90.80	None	Proximity Switch	
					Arch	7'-6" X 8'0"	94	89.30	89.30								
B23	025	First & Hamilton	1970	1st-Hamilton	Concrete/Box	2 @ 10'-0" X 10' - 6"	587	84.20	86.00	90.00		4	10'-0" X 12'-0"	86.2, 85.2	Yes	Proximity Switch and level Sensor	
B24	026	Third & Jefferson	1919	3rd	Concrete & Brick / Semi Circle	3 @ 4'-0" Radius	1988	92.00	92.00			6	9'-2" X 3'-9"	92.00	None	Proximity Switch	
B25	027	Cabacier & Jefferson	1851	Cabacier	Brick/Cyl	4'-0" diameter	1796	88.80	92.40	95.80					None	(C)	
B26	028	11th & Jefferson	1883	11th	Concrete & Brick/Cyl	2 @ 5'-0"	150	93.24	93.45	95.70	97.20				None	Electrode	

					Outfall Dimensions							Backwater Gates					
	MDEQ	Outfall	Year		Material/		Downstream		Up-stream	Weir Crest	Flash board			Sill	Stop	Sensing	
Outfall ID #	Permit No.	Location	Built	Sewer	Shape	Size	Length	Invert	Invert	Eleva-tion	Eleva-tion	Number	Size	Eleva-tion	Logs	Device	Remarks
B27	029	12th & Jefferson (Rosa Parks)	1926	12th	Brick & Concrete/Cylinder	2 @ 4'-0"	350	94.30	94.90	95.60	97.60				None	Electrode	
B28	030	14th & Jefferson	1884	14th	Brick/Cylinder	2 @ 4'-3"	360	93.13	93.85	95.65	98.15				None	Electrode	
B29	031	18th & Jefferson	1934	18th	Brick & Concrete/Cylinder	2 @ 5'-3"	841	92.00	92.42	95.60	97.60				(C)	Electrode	
B30	032	21st & Jefferson	1888	21st	Brick/Egg	4'-6" X 6'-0"	369	90.90	90.90			2	5'-6" X 5'-0"	90.90	None	Proximity Switch	
B31	033	24th & Jefferson	1889	24th	Box	2 @ 6'-0" X 5'-0"	565	92.90	90.47	95.60	97.00				(C)	Electrode	
B32	034	W Grand Blvd & Jefferson	1930	W Grand Blvd	Brick & Concrete/Cylinder	3'-0"	376	92.29	93.30			2	3'-0" X 5'-6"	93.30	None	Proximity Switch	
B33	035	Swain & Jefferson	1924	Swain	Concrete/Box	2@ 6.3' X 6'	341	92.40	92.80	95.60	97.10				None	Electrode	
B34	036	Scotten & Jefferson	1888	Scotten	Concrete/Cylinder	2 @ 4'-8"	400	93.60	93.80	95.60	97.50				None	Electrode	
B35	037	McKinstry & Jefferson	1927	McKinstry	Brick/Cylinder	2 @ 4.5'-0"	950	91.30	94.00& 93.60	95.50	97.00				None	Electrode	
B36	038	Summit & Jefferson	1922	Clark-Summit	Concrete/Box	3 @ 8'-8" X 7'-6"	600	88.00	88.30			6	8'-0" X 10'-5"	87.50	Yes	Proximity Switch	
B37	039	Ferdinand & Jefferson	1950	Ferdinand	Concrete/Cylinder	2 @ 4.5'	130	93.30	94.10	95.50	97.10				None	Electrode	
B38	040	Morrell & Jefferson	1912	Morrell	Brick/Cylinder	4 @ 5'-0"	880	91.00	91.00			2	9'-0" X 9'-6"	90.20	None	Proximity Switch	

					Outfall Dimensions							Backwater Gates					
	MDEQ	Outfall	Year		Material/		Downstream		Up-stream	Weir Crest	Flash board			Sill	Stop	Sensing	
Outfall ID #	Permit No.	Location	Built	Sewer	Shape	Size	Length	Invert	Invert	Eleva-tion	Eleva-tion	Number	Size	Eleva-tion	Logs	Device	Remarks
B39	041	Junction & Jefferson	1928	Calvary	Concrete/Cylinder	13'-0"	890	81.30	81.80			2	10'-0" X 8'-0"	85.50	Yes	Proximity Switch	
B40	042	Campbell & Jefferson	1908	Campbell	Brick/Cylinder	1 @ 6.5'	1078	93.21	94.40	95.50	97.50				None	Electrode	
					Cylinder	1 @ 6.3'	1078	93.21	94.40	95.50	97.50						
					Cylinder	1 @ 6.2'	1078	93.21	94.40	95.50	97.50						
B41	043	Dragoon & Jefferson	1952	Livernois Relief	Concrete/Cylinder	10'-6"	2353	85.20	85.70			2	10'-0" X 12'-0"	85.70	Yes	Proximity Switch	
B42	044	Schroeder & Jefferson	1938	Schroeder	Brick/Cylinder	1 @ 6'-0"	1200	93.60	95.60	97.00					None	Electrode	
					Cylinder	1 @ 6.8'	1200	93.60	94.20	95.40	96.90						
B44	046	Cary & Jefferson	1946	Cary	Brick/Egg	3.3x5.3	447	94.53	96.53	96.53					None	Electrode	
					Cylinder	4.8'	650	94.30	92.30								
B45	047	Dearborn & Jefferson	1973	Dearborn-Sloan	Concrete/Ellipse	12'-7" X 8'-0"	141	86.75	90.24			2	12' X 8'	90.24	Yes	Proximity Switch	
B46	051	Carbon at Rouge River	1934	Carbon	Concrete/Cylinder	5'-6"	1300	92.53	93.40			1	5'-6" tide gate	92.53	None	Level Sensor	
B47	052	Flora & Reisner	1936	Flora	Concrete/Egg	3'-4" X 5'-0"	515	89.50	89.90			2	4'-0" X 4'-0"	89.89	Yes	(C)	
B48	053	W. Fort at Rouge R. East side	1934	Fort St.	Concrete & Brick/Cylinder	3'-6"	400	93.50	93.98	95.60					None	(C)	
B52	057	Miller Road (Baby Creek)	1960	Baby Creek	Concrete/Box	2 BBL. @ 14'-6" X 17'-6"	128	78.30	78.30			4	9'-8" X 14'-10"	79.80	Yes	(C)	

					Outfall Dimensions							Backwater Gates					
	MDEQ	Outfall	Year		Material/		Downstream		Up-stream	Weir Crest	Flash board			Sill	Stop	Sensing	
Outfall ID #	Permit No.	Location	Built	Sewer	Shape	Size	Length	Invert	Invert	Eleva-tion	Eleva-tion	Number	Size	Eleva-tion	Logs	Device	Remarks
B59	048	Pulaski & Jefferson	1936	Pulaski	Brick/Cylinder	6'-6"	36	86.00	86.00			2	6.5' X 6.5'	86.00	None	(C)	
					Cylinder	1 @ 5'-0" then 2 @ 3'-6"	36	93.00	93.00			2	6.5' X 5'-6"	93.00			
RRO	050A	WWTP Rouge River (E)			Box	4@10'-8" X 11'-0"	854										
DRO-1	084A	WWTP Detroit River (E)			Cylinder	18'	5500										
EAST JEFFERSON DISTRICT																	
B1	080	Ashland (Fox Creek)	1929	Fox Creek	Concrete/Box	2 BBL. @ 12'-9" X 13'-6"	216	86.14	86.18			2	10' X 10'	82.00	Yes	(C)	
					Box	2 BBL. @ 15'-9" X 13'-6"	578	79.00	79.16								
B2	001	Conner creek	1929	Connor's Creek	Concrete/Box	3 BBL. @ 22'-0" X 18'-6"	1687	76.30	76.30			9	10' x 10'	80.00	Yes	(C)	
P20 TO P27	002	Conner Creek PS	1929	(C)	(C)	30' X 24' 20' X 24'	290	82.75							(C)	(C)	
P8 TO P15	003	Freud PS	1953	(C)	Concrete	3BBL@ 14' - 0" X 14' - 0"	250	76.30	(C)			(C)			Yes	(C)	
Notes:																	
(A) MDEQ = Michigan Department of Environmental Quality.																	
(B) Data needs to be verified.																	
(C) Data not available.																	
(D) References = DWSD Long Term CSO Plan for the Detroit and Rouge River, July 1, 1996 and GDRSS's Model Technical Memorandum No. 41																	
(E) Wastewater Treatment Plant Outfall (not collection system outfall)																	

Table 4.1.3 Backwater Gates Inventory (1)

BWG I.D. No	MDEQ Permit No	Location	Number	Size	Sill Elevation	Year Built
ROUGE RIVER DISTRICT						
B-54	059	W. Warren & Rouge River	2	6'-0" X 9'-0"	105.33	1948*
B-56	060	Tireman & Trinity (Gate 1)	6	6'-7" X 10'-6"	103.25	1962
B-57	060	Tireman & Trinity (Gate 2)	6	6'-7" X 10'-6"	103.25	1962
B-58	060	Tireman & Trinity (Gate 3)	6	6'-7" X 10'-6"	103.25	1962
B-60	061	W. Chicago & Spinoza (Gate 1)	6	7'-0" X 10'-6"	110.00	1962
B-61	061	W. Chicago & Spinoza (Gate 2)	6	7'-0" X 10'-6"	110.00	1962
B-62	061	W. Chicago & Spinoza (Gate 3)	6	7'-0" X 10'-6"	110.00	1962
B-65	064	Burt & Capital	2	8'-0" X 10'-6"	110.68	1960
B-67	065	Dolson & Lahser (Gate 1)	2	2 @ 8'-0" X 9'-0"	110.00	1928
B-68	065	Dolson & Lahser (Gate 2)	2	2 @ 8'-0" X 9'-0"	110.00	1928
B-69	067	Schoolcraft & W. Outer Drive				1970
B-70	066	Schoolcraft & W. Outer Drive				1970
B-71	068	Ray & Brammel	1	15" tide gate	121.86	1954
B-72	069	Brammel & Lyndon	2	8'-0" X 10'-6"	116.46	1928*
B-75	070	Eliza Howell Dr. & Fenkell				1963
B-76	071	16100 Riverview - Puritan Pump Station	2	6'-6" X 6'-6"	119.19	1964
B-77	072	Puritan & Hazelton - Puritan Headwell	1	6'-0" X 10'-6"	122.30	1971
B-79	073	Ridge & Florence				1953*
B-80	074	McNichols & Beaverland	3	8'-0" X 9'-0"	123.00	1927*
B-81	074	McNichols & Beaverland	3	7'-0" X 7'-6"	123.90	1927*
B-82	075	Glenhurst & Margareta	1	2' tide gate	129.10	1950*
B-83	076	7 Mile & Shiawassee	1	8'-0" X 10'-6"	125.74	1972
B-85	077	7 Mile & Berg	1	8'-0" X 10'-6"	131.00	1971
B-86	078	Shiawassee & Frisbee	1	6'-0" X 10'-6"	128.50	1960
B-87	079	Pembroke & Berg	3	6'-0" X 10'-6"	127.49	1929*

Table 4.1.3 Backwater Gates Inventory (1)

Table 4.1.3 Backwater Gates Inventory (1)

BWG I.D. No	MDEQ Permit No	Location	Number	Size	Sill Elevation	Year Built
CITY OF DEARBORN						
B-53	058	Hubbell - Southfield	8	9'-0" X 10'-6"	92.00	1948
OAKWOOD DISTRICT						
B-49	056	Oakwood & Fort West				1921
B-50	-	Oakwood & Fort	2	9'-0" X 10'-6"	87 & 86	1951
B-51	054	Oakwood & Fort / Wayne County				1920*
CENTRAL DISTRICT						
B-4	006	E. Jefferson & Burns	6	8'-0" X 10'-6"	86.20	1927*
B-9	011	Adair & Wight	2	4'-0" X 6'-6"	92.40	1935*
B-10	012	Jos Campau & Wight	6	6'-0" X 10'-6"	91.50	1920*
B-11	013	Chene St. & Franklin	4	3'-7" X 3'-7"	93.70	1936
B-17	019	Rivard & Franklin	2	6'-0" X 5'-6"	92.10	1935*
B-19	021	Randolph & E. Jefferson	2	8'-0" X 7'-0"	88.60	1931*
B-20	022	Atwater & Bates	6	9'-0" X 7'-0"	88.25	1935*
B-21	023	Woodward & Hart Plaza		10'-0" X 12'-0"	90.00	1935*
B-22	024	Griswold & Hart Plaza	2	8'-6" X 10'-0"	90.80	1935*
B-23	025	Cobo Hall West	4	10'-0" X 12'-0"	86.2,85.2	1935*
B-24	026	Jefferson & Third	6	9'-2" X 3'-9"	92.00	1919*
B-30	032	Jefferson & 21st	2	5'-6" X 5'-0"	90.90	1880*
B-32	034	Jefferson & W. Grand Blvd.	2	3'-0" X 5'-6"	93.30	1930*
B-36	038	Jefferson & Summit	6	8'-0" X 10'-5"	87.50	1922*
B-38	040	Jefferson & Morrell	2	9'-0" X 9.5'-0"	90.20	1912*
B-39	041	Jefferson & Junction	2	10'-0" X 8'-0"	85.50	1928*
B-41	043	Detroit River & Dragoon	2	10'-0" X 12'-0"	85.70	1970*
B-45	047	W. Jefferson & Dearborn	2	12' X 8'	90.24	1973
B-46	051	Carbon & Foreman	1	5'-6" tide gate	92.53	1934*

Table 4.1.3 Backwater Gates Inventory (1)

Table 4.1.3 Backwater Gates Inventory (1)

BWG I.D. No	MDEQ Permit No	Location	Number	Size	Sill Elevation	Year Built
B-47	052	Reisner & Flora - Fort East	2	4'-0" X 4'-0"	89.89	1936*
B-52	057	Miller & Fort / Baby Creek	4	9'-8" X 14'-10"	79.80	1960
B-59	048	Jefferson & Pulaski	2	6'-6" X 6'-6" 6'-6" X 5'-6"	86.00 93.00	1929*
B-95		Between Jos Campau and & Adair	1			
B-98+		202 Parkview (Fairview P.S)				
B-99+		E. Jefferson & Tennessee				
B-100+		E. Jefferson & Montclair				
EAST JEFFERSON DISTRICT						
B-1	080	Fox Creek at E. Jefferson	2	10'-0" X 10'-0"	82.00	1929
B-2	001	12244 E. Jefferson - Conner Pump Station	9	10'-0" X 10'-0"	80.00	1929
(+) In-System backwater gates (not Outfall backwater gates)						
(1) Reference: DWSD Long Term CSO Plan for the Detroit and Rouge River, July 1, 1996						
* Needs to be verified						

Table 4.1.4 Outfall Diversion Dam Inventory (1)

DAM I.D. No	MDEQ PERMIT No *	LOCATION	DAM with BWG	Year Built
ROUGE RIVER DISTRICT				
D56	060	Tireman and Trinity Gate 1	Yes	1962
D57	060	Tireman and Trinity Gate 2	Yes	1962
D58	060	Tireman and Trinity Gate 3	Yes	1962
D60	061	West Chicago and Spinoza Gate 1	Yes	1962
D61	061	West Chicago and Spinoza Gate 2	Yes	1962
D62	061	West Chicago and Spinoza Gate 3	Yes	1962
D63	062	W. Chicago (WS of Rouge River)		1962
D64	063	Plymouth (WS of Rouge River)		1930
D65	064	Burt and Capital	Yes	1960
D67	065	Lahser and Dolson Gate 1	Yes	1928
D68	065	Lahser and Dolson Gate 2	Yes	1928
D69	067	West Parkway and Outer Drive	Yes	1970
D70	066	Schoolcraft and Outer Drive	Yes	1970
D72	069	Lyndon and Brammell	Yes	1928
D76	071	Puritan Stn. & W. of Rouge River	Yes	1964
D77	072	Puritan & E. of Rouge River	Yes	1971
D80	074	McNichols and Beaverland	Yes	1927
D81	074	McNichols Relief and Beaverland	Yes	1927
D82	075	Glenhurst and Margareta	Yes	1950
D83	076	7 Mile and Shiawassee	Yes	1972
D85	077	7 Mile and Berg	Yes	1971
D86	078	Frisbee and Shiawassee	Yes	1960
D87	079	Pembroke and Berg	Yes	1929
OAKWOOD DISTRICT				
D49	056	S. Fort and Oakwood	Yes	1921
CENTRAL DISTRICT				
D3	005	McClellan & Jefferson		1930+
D5	007	Iroquois & Jefferson		1894
D6	008	Helen & Jefferson		1927
D7	009	Meldrum (Mt. Elliot)		1914
D8	010	Conant - Mt. Elliot (Leib)		1953
D11	013	Chene St. and Franklin	Yes	1936
D12	014	Dubois & Franklin		1934
D13	015	St. Aubin & Franklin		1921
D14	017	Orleans and Franklin		1930
D15	016	Orleans Relief and Guyon		1967
D16	018	Riopelle & Franklin		1885
D18	020	Schweizer Place (Hastings)		1856
D20	022	Bates and Atwater	Yes	1922
D21	023	Woodward and Hart Plaza	Yes	1890

Table 4.1.4 Outfall Diversion Dam Inventory (1)

DAM I.D. No	MDEQ PERMIT No *	LOCATION	DAM with BWG	Year Built
D23	025	1st/ Hamilton and Civil Center Dr	Yes	1970
D25	027	Cabacier & Jefferson		1851
D26	028	11th and Jefferson		1883
D27	029	12th and Jefferson		1926
D28	030	14th and Jefferson		1884
D29	031	18th and Jefferson		1934
D31	033	24th and Jefferson		1889
D33	035	Swain and Jefferson		1924
D34	036	Scotten and Jefferson		1888
D35	037	McKinstry and Jefferson		1927
D36	038	Summit and Jefferson	Yes	1922
D37	039	Ferdinand and Jefferson		1950
D40	042	Campbell and Jefferson		1908
D42	044	Schroeder and Jefferson		1938
D44	046	Cary and Jefferson		1946
D48	053	West Fort and Reisner		1934
D95		Between Jos Campau and Adair		
(1) Reference :CS-1281 Assistance with Phase III-Combined Sewer Overflow Program, Real Time Control				
Work Group				
(+) Estimated				
* MDEQ = Michigan Department of Environmental Quality				

Table 4.1.5 In-System Storage Devices and System Gate Inventory (1)

No	MDEQ Permit No	Location / Equipment	Quantity	Manufacturer		Gate Size	Operator Type / HP and Power	Year Built
				Gate	Operator			
ROUGE RIVER DISTRICT								
B-56,57,58	060	Tireman East of Rouge River / 3 sets double leaf gates	6	Rodney Hunt	Rotork	150" X 84"	Electric 3.06 / 240 V3-60	2000
B-60,61,62	061	West Chicago East of Rouge River / 3 sets double leaf gates	6	Rodney Hunt	Rotork	150" X 84"	Electric 3.06 / 240 V3-60	2000
B-67, 68	065	Lahser & Dolson / 2 sets double leaf gates	4	Rodney Hunt	Rotork	132" X 108"	Electric 3.06 / 240 V3-60	2000
B-72	069	Lyndon East of Rouge River / 2 sets double leaf gates	4	Rodney Hunt	Rotork	150" X 72"	Electric 1.13 / 240 V3-60	2000
B-77	072	Puritan East of Rouge River / 2 sets double leaf gates	4	Rodney Hunt	Rotork	72" X 72"	Electric 1.13 / 240 V3-60	2000
B-80	074	McNichols & Beaverland / 3 sets double leaf gates	6	Rodney Hunt	Rotork	111" X 96"	Electric 1.13 / 240 V3-60	2000
B-81	074	McNichols & Beaverland / 3 sets double leaf gates	6	Rodney Hunt	Rotork	111" X 96"	Electric 1.13 / 240 V3-60	2000
VR-9	N/A	Warren & Pierson / Sluice Gate	1			72" X 60"	Hydraulic 240/1/60	
VR-17	N/A	Shiawassee & Seven Mile						
SOUTHFIELD DISTRICT								
VR - 14	N/A	Eight Mile & Southfield / Regulator	N/A					
CITY OF DEARBORN								
VR - 8	N/A	Hubbell & Southfield at Michigan / Sluice gate	2			60" X 28"	Hydraulic 240/1/60	1972
HUB - 1	N/A	Hubbell & Southfield at Michigan / Inflatable Dam	2	Bridgestone		174" X 144"	Local Automatic	1988
BABY CREEK DISTRICT								
ISD002	N/A	Littlefield - Morrow circle	1					*
ISD003	N/A	Wetherby - Eagle	1					*
ISD004	N/A	Livernois - Ridgewood	1					*
ISD008	N/A	Clairmount - Atkinson	1					*
ISD009	N/A	Hamilton - Highland	1					*
ISD010	N/A	Hamilton - North of Pennsylvania Railroad	1					*
CENTRAL DISTRICT								
LR-2	N/A	Livernois & Ranspatch / Inflatable Dam	1	Rodney Hunt	Hydraulic	126" Sewer	Inflatable Dam / 240/3/60	1972,1998

Table 4.1.5 In-System Storage Devices and System Gate Inventory (1)

No	MDEQ Permit No	Location / Equipment	Quantity	Manufacturer		Gate Size	Operator Type / HP and Power	Year Built
				Gate	Operator			
-	N/A	Dubois & Atwater / Inflatable Dam	1	Bridgestone				2001
VR-1	N/A	Conner at Warren / Roller Gates						1968
VR-3	N/A	McClellan & Jefferson / Sluice Gate	2			24" X 24"	Hydraulic 240/1/60	1970+
VR-4	N/A	Jefferson & Harbortown / Regulator	4					1970+
VR-5	N/A	Jefferson & Dragoon / Sluice Gate	1			36" X 42"	Hydraulic 240/1/60	1970+
VR-6	N/A	Dearborn St. & Jefferson / Sluice Gate	1			66" X 66"	Hydraulic 240/1/60	1970+
VR-7	N/A	Baby Creek at Fort - Miller / Sluice Gate	1					1970+
VR-10	N/A	Livernois & Joy / Sluice Gate	1			66" X 66"	Hydraulic 240/1/60	1970+
VR-11	N/A	Livernois & Warren / Sluice Gate	2			78" X 78"	Hydraulic 240/1/60	1970+
VR-12	N/A	First & Larned / Regulator	2					1970+
VR-13	N/A	4th & Martin Luther King / Regulator	N/A					1970+
VR-15	N/A	Gratiot & Mt.Elliot / Sluice Gates	2				Hydraulic 240/1/60	1970+
VR-16	N/A	Gratiot & Meldrum / Sluice Gates	1					1970+
ISD005	N/A	Joy - Whitfield	1					*
ISD006	N/A	Michigan - Lovett	1					*
ISD007	N/A	4th - Calumet	1					*
ISD011	N/A	Pontchartran - South of Seven Mile	1					*
ISD012	N/A	Conant between Jacob & Hanley	1					*
ISD013	N/A	Six Mile - Woodward	1					*
ISD014	N/A	Seven Mile - Main	1					*
EAST JEFFERSON DISTRICT								
VR-2	N/A	E. Jefferson and Clairpointe / Regulator	3					

(1) References: DWSD PC-698 Task I In-system Storage
DWSD PC-695 Regulator/Remote Flow Control Structure and Dam Rehabilitation

(*) Construction will start in June 2002 under CS - 1329

(+) Estimated

TABLE 4.2.1 OUTFALL FLOW REGULATORS DEFICIENCIES (1)

Regulator ID #	Outfall Location	Deficiency Type *	Rehabilitated
CENTRAL DISTRICT			
B-5	Jefferson and Iroquois	3,5	PC-695 1998
B-6	Jefferson and Helen	3,4	PC-695 1998
B-7	Wight and Mt. Elliot	4,7,10	PC-695 1998
B-8	Jefferson and Leib	3,4,7,10	Planned Under CS-1281
B-9	Franklin and Adair	1,5,7,10	PC-695 1998
B-95	Franklin and McDougall		PC-695 1998
B-10	Franklin and Joseph Campau	1,3,4,5,7,10,11	PC-695 1998
B-11	Franklin and Chene	3,4,5,7,8,9,10	Planned Under CS-1281
B-12	Franklin and Dubois	3,4,5,7,10	PC-695 1998
B-13	Franklin and Aubin	3,4,5,7,10	Planned Under CS-1281
B-14	Franklin and Orleans	1,4,5,7,10	PC-695 1998
B-16	Franklin and Riopelle	4,5,7,10	PC-695 1998
B-17	Franklin and Rivard	1,3,4,5,7,10	PC-695 1998
B-18	Franklin and Hastings	3,4,5,7,10	PC-695 1998
B-19	Jefferson and Randolph	3,4,7,10	PC-695 1998
B-20	Jefferson and Bates	3,4,5,7,10	PC-695 1998
B-21	Jefferson and Woodward	3,4,10	PC-695 1998
B-22	Jefferson and Griswold	3,4,7,10	PC-695 1998
B-23	1st and Woodbridge	1,3,4,5,7	PC-695 1998
B-24	Jefferson and Third	3,4,5,10,11	PC-695 1998
B-25	Jefferson and Cabacier	3,5,8,10	PC-695 1998
B-26	W. Jefferson and Eleventh	1,3,4,5,7,10,12	PC-695 1998
B-27	W. Jefferson and Twelfth	3,4,5,7,10	PC-695 1998
B-28	Jefferson and 14th	1,3,4,5,7,10	PC-695 1998
B-29	Jefferson and 18th	4,5,7,10	PC-695 1998
B-30	W. Jefferson and 21st	4,5,7,10	PC-695 1998
B-31	Jefferson and 24th	3,4,5,7	PC-695 1998
B-32	Jefferson and W. Grand Blvd.	4,7,10	PC-695 1998
B-33	Jefferson and Swain	1,4,5,7	PC-695 1998
B-34	Jefferson and Scotten		PC-695 1998
B-35	Jefferson and McKinstry	3,4,5,7,9,10	PC-695 1998
B-36	Jefferson and Summit	1,3,4,5,7,10	PC-695 1998
B-37	Jefferson and Ferdinand	3,4,5,7,9	PC-695 1998
B-38	W. Jefferson and Morrell	3,4,7,10	PC-695 1998
B-39	W. Jefferson and Junction	1,3,4,5,7,10,11	PC-695 1998

TABLE 4.2.1 OUTFALL FLOW REGULATORS DEFICIENCIES (1)

Regulator ID #	Outfall Location	Deficiency Type *	Rehabilitated
B-40	W. Jefferson and Campbell	1,3,4,5,7,10	PC-695 1998
B-42	W. Jefferson and Schroeder	4,5,7,10	PC-695 1998
B-44	W. Jefferson and Cary	3,4,5,7,9,10	PC-695 1998
B-47	Reisner and Flora	3,4,5,10	PC-695 1998
B-59	Jefferson and Pulaski	3,4,5,7, 9,10	PC-695 1998
EAST JEFFERSON DISTRICT			
B-1	Ashland and Jefferson		Inspection Needed

(1) Reference: DWSD Design Basis Report Wastewater Collection System Task 2 and 3, CS-1158 Regulator and Related Component Rehabilitation

- Deficiency Type
  1. Frame and Cover
  2. Manhole Cone
  3. Manhole Steps
  4. Grating
  5. Brickwork under M.H. Frame
  6. Outlet Structure
  7. Regulating Chamber
  8. Diversion Dam
  9. Diversion Chamber
  10. Sludge Buildup
  11. BWG Chamber
  12. Flashboards

Note: See Appendix B for a detailed description of these deficiencies

Table 4.2.2 - OUTFALLS DEFICIENCIES (1)

I.D. NUMBER	LOCATION	INSPECTION RESULTS	REHABILITATION COMPLETED
ROUGE RIVER DISTRICT			
B-54	Warren At Rouge River	Outfall O.K. Needs Access Manhole Upstream of Sewer BWG.	
B-56, 57, 58	Tireman At Rouge River	Minor Crack & Exposed Rebar. Outfall Drain Plugged.	Slide Gate installed PC-698 2000
B-59	Pulaski & Jefferson	West & Center Barrel OK; East Barrel Collapsed & Full Of Debris.	
B-60, 61,62	W. Chicago & Trinity	Minor Cracking In Crown, Mineral Deposits At Joints.	
B-63	W. Chicago & Rouge River (Outer Drive)	Debris Partially Blocking Opening To River.	
B-65	Fullerton & Rouge River (Schoolcraft)	Minor Cracking In Crown	
B-67, 68	Glendale & Dolson (Lahser)	Minor Cracking In Crown	Slide Gate installed PC-698 2000
B-69	Jeffries Fwy. & Rouge River (W. Parkway)	Outfall Ok. 18”-24” Sediment In Both Barrels At River Outlet	Rehabilitation Planned under DWS - 850
B-72	Lyndon & Brammel	Minor Cracks & Spalling	Slide Gate installed PC-698 2000
B-80	McNichols & Rouge River (Beaverland)	South Chamber: Heavily Eroded Face Of Headwall; Interior has eroded Floor & Wall. Middle Chamber: Floor Is Badly Eroded With Exposed Rebar. North Chamber: Minor Cracks & Floor Erosion	
B-82	Glenhurst & Rouge River	Misaligned Pipe Segments (Offset 4” To 6”)	Rehabilitation Planned under DWS - 850
B-85	7 Mile & Berg	Rough Concrete Work: Minor Cracking & Spalling	
B-87	Frisbee & Berg	Minor Cracking & Spalling	
OAKWOOD DISTRICT			
P-42 to P-47	Oakwood Pump Station	Not Inspected	
B-49	Fort At rouge River (West)	DWSD TV Crew Unable to locate submerged pipe.	
B-50	Fort and Bayside at Rouge River	Rehabilitate manhole frame, cover and steps and grating	

Table 4.2.2 - OUTFALLS DEFICIENCIES (1)

I.D. NUMBER	LOCATION	INSPECTION RESULTS	REHABILITATION COMPLETED
CENTRAL DISTRICT			
B-3	McClellan & Jefferson	Inspected in 1988 under Contract CS-1053, Task Order No. 1. Washout of brick walls between 3 of 4 barrels at 1450 from river. East – Center Barrel: Missing brick at waterline from 75 to 150 feet from river. West Barrel: An area 4 ft x 15 ft missing at 440 ft from river. Needs access MH downstream of Diversion Dam.	Four outfall barrels were slip lined with 42" Hobas pipe under contract CS –1325 (Task 2), October, 2000
B-6	Helen & Jefferson	East: Holes in sidewall to soil. Center: Missing 1 or 2 layers of brick at waterline 0-10' from river. Holes to east & west barrel at 10' from river. West: Small 12" x 12" side washout to surface from river. Broken divider wall blocks entrance to barrel. Needs Access MH down-steam of dam.	Three 63" outfall barrels being rehabilitated with in-situ pipe process under contract DWS – 835, started December, 2001
B-8	Leib (Harbortown)	Inspected in 1988 under CS-1053, Task Order No. 1. East barrel: 20" x 20" hole around pipe penetrating into concrete outfall.	PC-731 2002
B-12	Dubois & Franklin	Heavy brick damage in all barrels at 240-260 ft. from river. Can see through holes between all three barrels.	PC-731 2002
B-13	St. Aubin & Franklin	One 18" hole in side of barrel at 920 ft from river.	PC-731 2002
B-14	Orleans & Franklin (West)	End of outfall covered with riprap.	
B-16	Riopelle & Franklin	West: 1 layer of brick missing at 3 and 9 o'clock positions at 650-700 ft and 850-990 ft from dam. East: Brick layer missing from ceiling and side at 840-890 ft from dam.	
B-18	Schweizer & Franklin	Brick damage at 260-315 ft from dam.	Rehabilitation Planned under DWS 849
B-22	Griswold & Woodbridge	Inspected in 1988 and reinspected in 1995. 1995 Results: Exposed rebar (2' wide x 4' long x 8" deep) in pipe ceiling near manhole 440' from river.	
B-25	Cabacier & Jefferson	Outfall filled with sediment; not inspected.	
B-26	11th & Jefferson	Generally OK; Two small holes in West barrel at	Rehabilitation

Table 4.2.2 - OUTFALLS DEFICIENCIES (1)

I.D. NUMBER	LOCATION	INSPECTION RESULTS	REHABILITATION COMPLETED
		350 ft from dam.	Planned under DWS - 850
B-27	12th & Jefferson (Rosa Parks)	Inspected in 1988 and reinspected in 1995. 1995 Results: 10' x 6' x 3.5' washout in west barrel at 290 ft from dam.	
B-28	14th & Jefferson	Some brick damage to first layer of brick and one small hole in brick in east barrel.	Rehabilitation Planned under DWS - 850
B-29	18th & Jefferson	Damage in both barrels 0-20 ft from river. Hole in west barrel at 370 ft from dam.	
B-30	21st & Jefferson	Crown infiltration through missing mortar at 760' from dam.	
B-31	24th Jefferson		Two 66" outfall barrels to be lined with in-situ pipe under CS –1215 (Task 22)
B-32	W. Grand Blvd. & Jefferson	18" Gravel deposit at end of outfall.	
B-33	Swain & Jefferson	West: Bulkheaded at upper end and has sediment. East: Cracks and exposed rebar between 100 and 270 ft from river.	Rehabilitation Planned under DWS - 849
B-34	Scotten & Jefferson	Brick damage in both barrels between 80-150 feet from river.	
B-35	McKinstry & Jefferson	West: At 625' from dam, one 10" sq. hole between barrels. East: Heavy damage at 620-650 ft from dam. Many areas of minor damage in both barrels.	Rehabilitation Planned under DWS - 849
B-36	Summit & Jefferson	Outfall OK except 2" and 3" wide cracks at 530' to 670' from BWG to river in east barrel.	
B-40	Campbell & Jefferson	All 3 barrels have holes connecting barrels 0-20 ft from river. East barrel has damage at 150-160 ft from river.	Rehabilitation Planned under DWS - 849
B-41	Dragoon & Jefferson	Outfall OK. Needs access manhole near Jefferson. Significant sediment in west barrel.	
B-42	Schroeder & Jefferson	Brick damage 870 to 880 ft from dam in west barrel. Some cracks and missing brick in east barrel.	
B-47	Flora & Reisner	Outfall full of sediment.	Rehabilitation Planned under

Table 4.2.2 - OUTFALLS DEFICIENCIES (1)

I.D. NUMBER	LOCATION	INSPECTION RESULTS	REHABILITATION COMPLETED
			DWS - 850
RRO	WWTP Rouge River	Not Inspected	To be inspected after April, 2003
DRO – 1	WWTP Detroit River Outfall	Capacity Limited	DRO –2 being constructed in PC – 709
EAST JEFFERSON DISTRICT			
B-1	Ashland (Fox Creek)	West barrel – exposed rebar in ceiling (2' x 2')	
B-2	Conner Creek	East barrel has 3 ft of sediment starting at 440 ft. from end of outfall.	PC-739 2005
P-8 to P-15	Freud Pump Station	Debris in stop log slots; not inspected. Needs access MH between stop logs and pump station.	
P-20 to P-31	Conner Creek Pump Station	Not Inspected.	

(1) Reference: CS-1158 Long Term CSO Plan for the Detroit and Rouge Rivers, July 1, 1996, Volume 2, 10.06A, Collection System Rehabilitation

Table 4.2.3 Backwater Gates Deficiencies
Not Completed

BACKWATER GATE I.D. NO.	LOCATION	MATERIALS & SIZE	1992 INSPECTION REMARKS (1)	1995 INSPECTION REMARKS (2)	REMARKS
ROUGE RIVER DISTRICT					
B-54	WARREN & PIERSON	2 TIMBER GATES. ALL HARDWARE IS ORIGINAL BRONZE.	TOP OF THE TIMBERS ARE DETERIORATING; GATES ARE SEALING WELL	SEWER GATE: GOOD CONDITION. RIVER GATE: WARPED WOODEN GATE (1" GAP; NOT SEALING)	REPAIR BY DWSD SCHEDULED FOR MAY 1997
B-56, B-57, B-58	TIREMAN & TRINITY	3 SETS OF (2) TIMBER GATES EACH 10'-6" X 7'-0". HINGE PINS AND FLAP ATTACHMENT PINS ARE ORIGINAL BRONZE.	TOPS OF THE TIMBER GATES ARE ROTTING	NOT INSPECTED	REPAIR BY DWSD SCHEDULED FOR JUNE 1997
B-60, B-61, B-62	W. CHICAGO & TRINITY	3 SETS OF (2) TIMBER GATES 7' X 10'6" WITH ORIGINAL BRONZE PINS, STAINLESS STEEL BATTENS AND GASKET.	B-60 & B-62 : TIMBER BEGINNING TO DETERIORATE AT THE TOP B-61: GATES SEAL WELL	NOT INSPECTED	SLIDE GATE INSTALLED PC-698 1998
B-80	MCNICHOLS & ROUGE RIVER NORTH (BEAVER-LAND)	3 TIMBER GATES 7' X 7'6"' WITH ORIGINAL BRONZE HARDWARE AND STAINLESS STEEL BATTENS.	GATE FLAP TIMBERS ARE DETERIORATED. GATES HOLD NOW BUT REQUIRE RECONDITIONING	SOUTH CHAMBER: TOP OF WOOD ROTTED AWAY 2". MIDDLE CHAMBER: TOP OF BOARDS ROTTED. NORTH CHAMBER: TOP OF BOARDS ROTTED (12" VERTICAL PENETRATION).	BACKWATER GATES REMOVED UNDER PC-698 1998

Table 4.2.3 Backwater Gates Deficiencies
Not Completed

BACKWATER GATE I.D. NO.	LOCATION	MATERIALS & SIZE	1992 INSPECTION REMARKS (1)	1995 INSPECTION REMARKS (2)	REMARKS
B-81	MCNICHOLS & ROUGE RIVER SOUTH	3 TIMBER GATES 8' X 9' WITH ORIGINAL BRONZE HARDWARE AND STAINLESS STEEL BATTENS.	THE GATES REQUIRE RECONDITIONING	NOT INSPECTED	BACKWATER GATES REMOVED UNDER PC-698 1998
B-82	GLENHURST	1 CAST IRON GATE 2' X 3'.	GATE IS IN GOOD CONDITION. REQUIRES ONLY LIGHT CLEANING AND ADJUSTING. THERE IS AND ACCUMULATION OF GROUT THAT SHOULD BE REMOVED.	NOT INSPECTED	REPAIR BY DWSD SCHEDULED FOR OCTOBER 1996
OAKWOOD DISTRICT					
B-51	FORT & BAYSIDE (SOUTH)	2 TIMBER GATES 9' X 10'-6". ALL HARDWARE IS BRONZE.	GATE ON RIVER SIDE IS NEW. GATE ON SEWER SIDE IS HELD OPEN BY THE ENTRAPMENT OF A BASEBALL BAT.	SEWER GATE: SOME LEAKING BETWEEN STEEL SEAL AND GATE. RIVER GATE: LARGE CONCRETE CHUNK HOLDING GATE OPEN; 3" GAP IN SIDES OF GATE.	REPAIR BY DWSD COMPLETED OCTOBER 1995
CENTRAL DISTRICT					
B-4	JEFFERSON & BURNS	6 TIMBER GATES 8' X 10'6" WITH BRONZE HINGE BOLTS	THE SEWER IS SURCHARGED TO THE LEVEL OF THE HIINGES. FURTHER OBSERVATION IS NECESSARY.	EAST RIVER GATE: HINGE PINS PARTIALLY SLIDE OUT; SCREWS STARTING TO BACK OUT OF TOP SEAL. CENTER RIVER GATE: SCREWS BACKING OUT OF SEAL.	DWSD COMPLETED REPAIR ON 7/21/95 AS FOLLOWS: REPLACED SEALING RUBBER,

Table 4.2.3 Backwater Gates Deficiencies
Not Completed

BACKWATER GATE I.D. NO.	LOCATION	MATERIALS & SIZE	1992 INSPECTION REMARKS (1)	1995 INSPECTION REMARKS (2)	REMARKS
				WEST RIVER GATE: ALUMINUM BACKING TO SEAL LOOSE. EAST SEWER GATE: ONE COTTER PIN MISSING. CENTER SEWER GATE: GOOD CONDITION. WEST SEWER GATE: SOME LEAKS.	REATTACHED SCREWS, REATTACHED BATTEN STRIPS, REPLACED COTTER PIN
B-10	JOS. CAMPAU & FRANKLIN	6 TIMBER GATES 6' X 8'8"	GATES ABOVE WATER APPEAR TO BE IN GOOD CONDITION. DETERIORATION OF BRICKWORK UNDER FRAMES OF BACKWATER GATES CAUSING SETTLEMENT IN PAVEMENT.	EAST RIVER GATE: GOOD CONDITION. WATER COMING THROUGH IRON COVER. CENTER RIVER GATE: GOOD CONDITION, SLIGHT LEAK. WEST RIVER GATE: GOOD CONDITION. EAST SEWER GATE: GOOD CONDITION; POST HOLDS GATE OPEN; RIVER GATE HOLDING. CENTER SEWER GATE: GOOD CONDITION WEST SEWER GATE: GOOD CONDITION	REPAIR BY DWSD SCHEDULED FOR OCTOBER 1996 EAST SEWER GATE REPAIR NOT REQUIRED; REINSPECTION FOUND POST WASHED OUT.
B-17	FRANKLIN & RIVARD	2 TIMBER GATES 5'6" X 6'	NOT INSPECTED	SEWER GATE: LEAKING. RIVER GATE: SOME CONCRETE DEBRIS KEEPING GATE AJAR	DWSD TO REMOVE DEBRIS JULY 1996

Table 4.2.3 Backwater Gates Deficiencies
Not Completed

BACKWATER GATE I.D. NO.	LOCATION	MATERIALS & SIZE	1992 INSPECTION REMARKS (1)	1995 INSPECTION REMARKS (2)	REMARKS
B-19	JEFFERSON & RANDOLPH	2 TIMBER GATES 7' X 8'. BOTH PRESUMED TO BE IN ORIGINAL CONDITION WITH ORIGINAL HARDWARE	NOT INSPECTED	SEWER GATE: BOLT MISING ON HINGE. SOME LEAKAGE. RIVER GATE: GATE HAS FALLEN DOWN AND IS LAYING ON BOTTOM; HINGE BROKEN.	RIVER GATE HAS BEEN REMOVED IN PREPARATION FOR REPAIR; STOP LOG INSERT IS CURRENTLY BEING MADE. DWSD TO COMPLETE REPAIR BY DECEMBER 1996
B-20	JEFFERSON & BATES	6 TIMBER GATES 7' X 9'. ALL HARDWARE IS STAINLESS STEEL.	ANOTHER REWORK IS REQUIRED. DAMPEN THE WAVES OR TRY CHAINING THE RIVER GATE TO ITS SEWER GATE.	NOT INSPECTED	DWSD COMPLETED REPAIRS BY REPLACING SEALING RUBBER ON 3 RIVER GATES.
B-21	JEFFERSON & WOODWARD	2 TIMBER GATES 12' X 10'. ALL HARDWARE IS BRONZE.	ALL GATE HARDWARE SHOULD BE REPLACED.	NOT INSPECTED	REPAIR BY DWSD SCHEDULED FOR MARCH 1996
B-22	JEFFERSON & GRISWOLD	2 TIMBER GATES 7' 10"X 6'. ALL HARDWARE IS STAINLESS STEEL.	GATES APPEAR TO BE IN GOOD CONDITION AND SEALING, EXCEPT RETENTION WASHERS AND COTTER PINS ARE MISSING ON SEWER GATE.	NOT INSPECTED	REPAIR BY DWSD SCHEDULED FOR AUGUST 1997

Table 4.2.3 Backwater Gates Deficiencies
Not Completed

BACKWATER GATE I.D. NO.	LOCATION	MATERIALS & SIZE	1992 INSPECTION REMARKS (1)	1995 INSPECTION REMARKS (2)	REMARKS
B-23	FIRST & HAMILTON	4 TIMBER GATES 10'X12'. ALL HARDWARE IS STAINLESS STEEL.	THE TWO RIVER GATES HAVE BEEN REMOVED. SEWER GATES ARE SEALING WITH MINIMAL INFLOW.	**EAST BARREL:** SEWER GATE: GOOD CONDITION. RIVER GATE: MISSING **WEST BARREL:** SEWER GATE: GOOD CONDITION; SOME LEAKAGE CAUSED BY A STICK IN SEAL; CHUNKS OF CONCRETE AGAINST GATE RIVER GATE: MISSING	**EAST BARREL:** REFABRICATED FRAME AND LOWER SEALING EDGE ON RIVER GATE; BUILT NEW GATE. WORK COMPLETED ON 8/25/95 BY DWSD **WEST BARREL:** REPAIR COMPLETED DEC. 1995 BY DWSD
B-24	JEFFERSON & THIRD	6 TIMBER GATES (SIZE UNKNOWN)	NOT INSPECTED	EAST SEWER GATE: MINOR LEAK. COTTER PIN MISSING ON LOWER HINGE PIN. CENTER SEWER GATE: COTTER PIN SLID SIDEWAYS; SOME LEAKAGE WEST SEWER GATE: LEFT SIDE COTTER PIN MISSING; SOME LEAKAGE EAST RIVER GATE: RIGHT SIDE BOTTOM PIN SLIPPED SIDEWAYS. CENTER RIVER GATE: CENTER LOWER LEFT STUD AND NUT MISSING; LOOSE CONCRETE CHUNKS ON BOTTOM. WEST RIVER GATE: RIGHT SIDE HINGE PIN MISSING; CHUNKS OF CONCRETE HOLDING GATE OPEN.	ACCESS AND REPAIR WORK TO BE COMPLETED BY DWSD BY DECEMBER 1996

Table 4.2.3 Backwater Gates Deficiencies
Not Completed

BACKWATER GATE I.D. NO.	LOCATION	MATERIALS & SIZE	1992 INSPECTION REMARKS (1)	1995 INSPECTION REMARKS (2)	REMARKS
B-30	21ST & JEFFERSON	2 TIMBER GATES 6'H X 5'W	NOT INSPECTED	RIVER GATE: DEBRIS IN SEAL CAUSING LEAK. SEWER GATE: PIECE OF CONCRETE HOLDING GATE OPEN	DEBRIS TO BE REMOVED JULY 1996 BY DWSD
B-36	JEFFERSON & SUMMIT	4 TIMBER GATES 10'6" X 8'. ALL HARDWARE IS STAINLESS STEEL.	GATES ARE HOLDING WELL	**WEST BARREL:** SEWER GATE: SEDIMENT BUILDUP ON BOTTOM HOLDING GATE OPEN 3". RIVER GATE: GOOD CONDITION. **EAST BARREL:** SEWER GATE: GATE OPEN 1.5" ON RIGHT SIDE RIVER GATE: SOME LEAKING **CENTER BARREL:** SEWER GATE: ROCK AND SEDIMENT BUILDUP ACROSS BOTTOM HOLDING GATE OPEN SLIGHTLY. RIVER GATE: GOOD CONDITION.	SEDIMENT CLEANUP BY DWSD SCHEDULED FOR AUGUST 1996
B-39	JEFFERSON & JUNCTION	2 TIMBER GATES 10' X 8'	NOT INSPECTED	EAST GATE: BLOCK OF CONCRETE HOLDING GATE OPEN CAUSING SLIGHT LEAK. WEST GATE: SOME LEAKAGE THROUGH JOINT IN GATE.	SEALS REPLACED ON LOWER SEALING EDGE OF RIVER GATE; WORK COMPLETED ON 7/28/95 BY DWSD

Table 4.2.3 Backwater Gates Deficiencies
Not Completed

BACKWATER GATE I.D. NO.	LOCATION	MATERIALS & SIZE	1992 INSPECTION REMARKS (1)	1995 INSPECTION REMARKS (2)	REMARKS
B-41	JEFFERSON & DRAGOON	2 TIMBER GATES 10' X 12'. ONE GATE HAS ORIGINAL HARDWARE, OTHER IS REBUILT.	NOT INSPECTED	SEWER GATE: DEBRIS ON FLOOR HOLDING GATE OPEN SLIGHTLY. RIVER GATE: ROCK AND DEBRIS IN STOP LOG TRACK; SOME LEAKAGE	REPAIR BY DWSD SCHEDULED FOR SEPTEMBER 1996
B-45	JEFFERSON & DEARBORN	2 TIMBER GATES 8' X 12' WITH ORIGINAL BRONZE HARDWARE, STAINLESS STEEL BATTENS.	NOT INSPECTED	SEWER GATE: SEAL NOT TIGHT; WOOD IN GATE DETERIORATED AND SPONGY. RIVER GATE: SOME LEAKING.	REPAIR BY DWSD SCHEDULED FOR SEPTEMBER 1996
B-46	CARBON AT ROUGE RIVER	1 CAST IRON GATE 60" DIAM WITH BRONZE SEATS AND STAINLESS STEEL HARDWARE.	GROUT BETWEEN THE FRAME AND THE MASONRY HEADWALL HAS WASHED OUT	NOT INSPECTED	REPAIR BY DWSD SCHEDULED FOR APRIL 1997
B-52	MILLER ROAD (BABY CREEK)	4 TIMBER GATES 14' X 9' WITH HINGE PINS.	GATES ARE IN GOOD CONDITION	**EAST BARREL (#3 & 4):** GATE #4: SOME LEAKAGE GATE #3: OPEN SLIGHTLY **WEST BARREL (#1 & 2):** GATE #2: 2" GAP ACROSS BOTTOM; MISSING NUTS ON CENTER HINGE. GATE #1: STOP LOG IN PLACE; SIGINIFICANT LEAK THROUGH STOP LOG (GAP IN BOTTOM)	NECESSARY REPAIRS MADE IN AUGUST 95 BY DWSD

Table 4.2.3 Backwater Gates Deficiencies
Not Completed

BACKWATER GATE I.D. NO.	LOCATION	MATERIALS & SIZE	1992 INSPECTION REMARKS (1)	1995 INSPECTION REMARKS (2)	REMARKS
EAST JEFFERSON DISTRICT					
B-1	ASHLAND & JEFFERSON	2 TIMBER GATES 10' X 10'	NOT INSPECTED	WEST GATE: GOOD CONDITION WITH SLIGHT LEAKAGE; UPSTREAM ROLLER GATE TRACK IN POOR CONDITION EAST GATE: GATE IN GOOD CONDIITON WITH SLIGHT LEAK; SOME WATER SEEPING THROUGH DAMAGED WALLS; UPSTREAM ROLLER GATE TRACK IN POOR CONDITION.	REHABILITATION INCLUDED AS PART OF PC-674 YEAR(?)
B-2	CONNER & JEFFERSON	9 TIMBER GATES 10' X 10'	NOT INSPECTED	**EAST BARREL:** EAST GATE: GOOD CONDITION; SOME FLOW AT BOTTOM CENTER GATE: GOOD CONDITION; SMALL LEAK WEST GATE: GOOD CONDITION; SMALL LEAK **CENTER BARREL:** EAST GATE: GOOD CONDITION; MINOR LEAKS CENTER GATE: GOOD CONDITION; STICK CAUSING SLIGHT LEAK WEST GATE: GOOD CONDITION	REPAIR OF EAST BARREL GATES BY DWSD SCHEDULED FOR NOVEMBER 1996 REPAIR OF CENTER BARREL GATES BY DWSD SCHEDULED FOR NOVEMBER 1996

Table 4.2.3 Backwater Gates Deficiencies
Not Completed

BACKWATER GATE I.D. NO.	LOCATION	MATERIALS & SIZE	1992 INSPECTION REMARKS (1)	1995 INSPECTION REMARKS (2)	REMARKS
				WEST BARREL: EAST GATE: GOOD CONDITION; SLIGHT LEAK CENTER GATE: GOOD CONDITION; SMALL LEAK WEST GATE: GOOD CONDITION	

NOTES:

1. 1992 INSPECTION WAS PERFORMED BY WCS (SUBCONTRACTOR) UNDER TASK 2 OF CS-1158 CONTRACT.
2. 1995 INSPECTION WAS PERFORMED BY THE CSO TEAM UNDER TASK 10 OF CS-1158 CONTRACT.

Table 4.2.4 Outfall Diversion Dam Deficiencies(1)

DAM I.D. NO.	LOCATION	DEFICIENCIES	INSPECTION CONTRACT / YEAR
	CENTRAL DISTRICT		
D3	Jefferson & McClellan	Rehabilitate manhole frame and cover and remove sludge.	CS-1158 1992
D15	Franklin & Orleans	Flashboard: Remove exist 2" x 4" stop logs and replace them with 4" x 4" logs in the same quantity.	CS-1158 1992
D26	11th St. & W. Jefferson	Flashboard: Make good contact between top of Dam surface and bottom of Flashboards.	CS-1158 1992
D95	McDougall & Franklin	Clean Deteriorated Surfaces: Apply repair mortar Sika-top SF by Sika Corporation or equal to finish surface. Apply bonding coat between existing concrete surface and new repair mortar.	CS-1158 1992

(1)Reference: Detroit Regulator Inspection, Contract CS-1158, Water Control System Limited, October, 1992

DWSD Design Basis Report Wastewater Collection System Task 2 and 3, CS-1158 Regulator and Related Components Rehabilitation, September, 1993

Table 4.2.5 In-System Storage Devices and System Gate Deficiencies (1)

NO	LOCATION	*DEFICIENCIES	REHABILITATION COMPLETED
	ROUGE RIVER DISTRICT		
VR-9	Warren & Pierson	Control Gate B	PC – 695 – 1998
	CITY OF DEARBORN		
VR-8	Hubbell & Southfield at Michigan	Regulator Gate B	PC-695 - 1998
	CENTRAL DISTRICT		
VR-1	Conner Flushing at Warren		
VR-3	McClellan & Cadillac		
VR-5	W. Jefferson & Dragoon	Control Gate B	None
VR-6	W. Jefferson & Dearborn	Control Gate D	None
VR-7	Miller Rd. – Baby Creek	Control Gate B	None
VR-10	Livernois & Joy	Control Gate B	PC – 695 – 1998
VR-11	Livernois & Warren	Control Gate B	PC – 695 – 1998
VR-13	4th Martin Luther King	Control Gate C	PC – 695 – 1998
VR-15	Gratiot & Mt. Elliot	Control Gate C	PC – 695 – 1998
VR-16	Gratiot & Meldrum	Control Gate C	PC – 695 – 1998
LR-2	Livernois & Rampatch	Inflatable Dam A	PC – 695 – 1998

(1) References: Detroit Regulator Inspection, Contract CS-1158 Water Control Systems Limited, October 1992

DWSD Design Basis Report Wastewater Collection System Task 2 and 3, CS-1158 Regulator and Related Components Rehabilitation, September, 1993

(*) Deficiencies

A Rehabilitation of manhole frame and cover

B Replace Control Gate with Slide gate; Rehabilitation of Chamber concrete surfaces; Construction of new cast-in-place reinforced concrete structures in the chamber; Replacement of access manholes, frames and covers; Install new manhole steps, ladders, grating and supports.

C Replace control gate with slide gate; Rehabilitation of chamber concrete surfaces; Replacement of access manholes, frames and covers; Install new manhole steps, ladders.

D Brickwork under M.H. frame needs rehabilitation.

Table 4.3.1 Recommended Flow Regulator Rehabilitation

I.D. NO.	LOCATION	DEFICIENCIES	Priority		
			Near term (5 year)	Mid term (10 years)	Long term (15 years)
B-8	**Jefferson and Leib**	Remove loose deteriorated concrete if there is any and clean concrete surfaces. Fill float chamber with lean concrete or flowable fill up to top of regulating chamber base slab. Provide 8" diameter pipe sleeve, completely grouted in the bottom of wall between float chamber and regulating chamber to avoid standing sewage water due to overflow in regulation chamber.	X		
B-11	**Franklin and Chene**	Fill float chamber with lean concrete or flowable fill up to top of regulating chamber base slab. Provide 8" diameter pipe sleeve, completely grouted in the bottom of wall between float chamber and regulating chamber to avoid standing sewage water due to overflow in regulation chamber.	X		
B-13	**Franklin and Aubin**	Fill float chamber with lean concrete or flowable fills up to top of regulating chamber base slab. Provide 8" diameter pipe sleeve, completely grouted in the bottom of wall between float chamber and regulating chamber to avoid standing sewage water due to overflow in regulation chamber.	X		

Table 4.3.2 Recommended Outfalls Rehabilitation (1)

I.D. NUMBER	LOCATION	INSPECTION RESULTS	COST *		
			Near Term (5 years)	Mid Term (10 years)	Long Term (15 years)
ROUGE RIVER DISTRICT					
B-54	Warren At Rouge River	Needs Access Manhole Upstream of Sewer BWG.			x
B-59	Pulaski & Jefferson	East Barrel Collapsed & Full Of Debris.		x	
B-63	W. Chicago & Rouge River (Outer Drive)	Debris Partially Blocking Opening To River.	x		
B-65	Fullerton & Rouge River (Schoolcraft)	Minor Cracking In Crown			x
B-69	Jeffries Fwy. & Rouge River (W. Parkway)	18”-24” Sediment In Both Barrels At River Outlet	x		
B-82	Glenhurst & Rouge River	Misaligned Pipe Segments (Offset 4” To 6”)		x	
B-85	7 Mile & Berg	Rough Concrete Work: Minor Cracking & Spalling			x
B-87	Frisbee & Berg	Minor Cracking & Spalling			x
CENTRAL DISTRICT					
B-3	McClellan & Jefferson	Inspected in 1988 under Contract CS-1053, Task Order No. 1. Washout of brick walls between 3 of 4 barrels at 1450 from river. East – Center Barrel: Missing brick at waterline from 75 to 150 feet from river. West Barrel: An area 4 ft x 15 ft missing at 440 ft from river. Needs access MH downstream of Diversion Dam.	x		
B-14	Orleans & Franklin (West)	End of outfall covered with riprap.	x		

Table 4.3.2 Recommended Outfalls Rehabilitation (1)

I.D. NUMBER	LOCATION	INSPECTION RESULTS	COST *		
			Near Term (5 years)	Mid Term (10 years)	Long Term (15 years)
B-16	Riopelle & Franklin	West: 1 layer of brick missing at 3 and 9 o'clock positions at 650-700 ft and 850-990 ft from dam. East: Brick layer missing from ceiling and side at 840-890 ft from dam.	x		
B-18	Schweizer & Franklin	Brick damage at 260-315 ft from dam.	X		
B-22	Griswold & Woodbridge	Inspected in 1988 and reinspected in 1995. 1995 Results: Exposed rebar (2' wide x 4' long x 8" deep) in pipe ceiling near manhole 440' from river.			X
B-25	Cabacier & Jefferson	Outfall filled with sediment; not inspected.	X		
B-26	11th & Jefferson	Generally OK; Two small holes in West barrel at 350 ft from dam.			X
B-27	12th & Jefferson (Rosa Parks)	Inspected in 1988 and reinspected in 1995. 1995 Results: 10' x 6' x 3.5' washout in west barrel at 290 ft from dam.	X		
B-28	14th & Jefferson	Some brick damage to first layer of brick and one small hole in brick in east barrel.			X
B-29	18th & Jefferson	Damage in both barrels 0-20 ft from river. Hole in west barrel at 370 ft from dam.		X	
B-30	21st & Jefferson	Crown infiltration through missing mortar at 760' from dam.			X
B-31	24th & Jefferson		x		
B-32	W. Grand Blvd. & Jefferson	18th Gravel deposit at end of outfall.	X		

Table 4.3.2 Recommended Outfalls Rehabilitation (1)

I.D. NUMBER	LOCATION	INSPECTION RESULTS	COST *		
			Near Term (5 years)	Mid Term (10 years)	Long Term (15 years)
B-33	Swain & Jefferson	West: Bulkheaded at upper end and has sediment. East: Cracks and exposed rebar between 100 and 270 ft from river.	x		
B-34	Scotten & Jefferson	Brick damage in both barrels between 80-150 feet from river.	x		
B-35	McKinstry & Jefferson	West: At 625' from dam, one 10" sq. hole between barrels. East: Heavy damage at 620-650 ft from dam. Many areas of minor damage in both barrels.	x		
B-36	Summit & Jefferson	Outfall OK except 2" and 3" wide cracks at 530' to 670' from BWG to river in east barrel.			x
B-40	Campbell & Jefferson	All 3 barrels have holes connecting barrels 0-20 ft from river. East barrel has damage at 150-160 ft from river.	x		
B-41	Dragoon & Jefferson	Needs access manhole near Jefferson. Significant sediment in west barrel.			x
B-42	Schroeder & Jefferson	Brick damage 870 to 880 ft from dam in west barrel. Some cracks and missing brick in east barrel.	x		
B-47	Flora & Reisner	Outfall full of sediment.	x		
EAST JEFFERSON DISTRICT					
B-1	Ashland (Fox Creek)	West barrel – exposed rebar in ceiling (2' x 2')			x
P-8, P-15	Freud Pump Station	Debris in stop log slots; not inspected. Needs access MH between stop logs and pump station.	x		

1) Reference: DWSD Long Term CSO Plan for the Detroit and Rouge Rivers, July 1,
(*) In 1996 dollars

Table 4.3.5 Recommended In-System Storage Devices and System Gates Rehabilitation

No.	**Location**	**Rehabilitation** Requirements	**Priority**		
Rouge District			**Near Term** (5 years)	**Mid Term** (10 years)	**Long Term** (15 years)
VR-9	Warren & Pierson	A			**X**
Central District					
VR-5	**W. Jefferson & Dragoon**	**B**	**X**		
VR-6	**W. Jefferson & Dearborn**	**D**	**X**		
VR-7	**Miller Rd. -** Baby Creek	**B**		**X**	

(*) Deficiencies

A Rehabilitation of manhole frame and cover

B Replace Control Gate with Slide gate; Rehabilitation of Chamber concrete surfaces; Construction of new cast-in-place reinforced concrete structures in the chamber; Replacement of access manholes, frames and covers; Install new manhole steps, ladders, grating and supports.

C Replace control gate with slide gate; Rehabilitation of chamber concrete surfaces; Replacement of access manholes, frames and covers; Install new manhole steps, ladders.

D Brickwork under M.H. frame needs rehabilitation.

APPENDIX B – FLOW REGULATOR DEFICIENCIES

Structure I.D. No./ Location	Type Of Structure	Item	Proposed Remedies
B-3 / McClellan and East Jefferson	Diversion Chambers	Frames and Covers	New manhole and access is required over diversion dam.
		Sludge Buildup	Thoroughly clean sludge build-up in interceptor upstream of the diversion dam in both chambers A & B.
B-5 / Iroquois and East Jefferson	Regulating W/Diversion Chamber	Manhole Steps	Remove existing M.H. steps in diversion chamber and replace with FRP ladder having anti-slip rungs after grouting all holes in concrete caused by removal of exist rungs.
		Brickwork Under M.H. Frames	No repair to brickwork is required at this time. However, provide additional manhole over middle compartment of diversion chamber.
B-6 / Helen and East Jefferson	Regulating W/Diversion Chambers	Manhole Steps	Remove existing M.H. steps in diversion chamber and replace with FRP ladder having anti slip rungs after grouting all holes in concrete caused by removal of exist rungs.
		Grating	Provide FRP grating with railing to access controls such as valves actuators, etc. Remove existing gratings no longer required for access.
B-7 /Mt. Elliott and Wight	Regulating	Grating	Remove existing grating from both regulator and float chambers. Replace grating in regulator chamber with new corrosion resistant fiber grid “FRP (Fiberglass Reinforced Plastic) grating” by Nemato composites or “Duradek high strength grating” by MMFG co. Or equal to access controls such as actuator etc. Repair all concrete spalls caused by removal of existing upgrating and framework.
		Sludge Buildup	Thoroughly clear sludge and clean all concrete surfaces using high-pressure detergent wash and with acid itch.
B-7 /Mt. Elliott and Wight	Regulating	Regulating Chambers (Regulato	Remove all loose and deteriorated concrete. Where reinforcing steel is encountered, thoroughly clean all

APPENDIX B – FLOW REGULATOR DEFICIENCIES

Structure I.D. No./ Location	Type Of Structure	Item	Proposed Remedies
		r, Float, & Sump Chambers)	reinforcement with wire brush, rotary brush, or other mechanical means to remove all rust and other contaminants. Apply bonding bridge “Sika Armatec 110” by Sika Corporation or equal between existing concrete and new repair mortar. Apply repair mortar Sikatop SF or equal, as per manufacturer’s recommendations, to finish surface. Fill float chamber with lean concrete or flowable fill up to top of regulating chamber base slab. Provide 8” diameter pipe sleeve, completely grouted in the bottom of wall between float chamber and regulating chamber to avoid standing sewage water due to overflow in regulation chamber.
B-8/ Leib and East Jefferson (Harbortown)	Regulating WI/Diversion Chamber	Manhole Steps	Remove existing M.H. steps from diversion chamber and replace with new FRP ladder having anti slip rungs after grouting all holes in concrete caused by removal of exist rungs.
		Grating	Clean grating in both the chambers. If deteriorated replace existing grating I regulating chamber with corrosion resistant FRP grating to access controls such as valves, actuators etc. Remove existing platforms from float chamber, as they are no longer required.
B-8/ Leib and East Jefferson (Harbortown)	Regulating WI/Diversion Chamber	Sludge Buildup	Thoroughly clear sludge and clean concrete surfaces using high-pressure detergent wash and with acid itch.
		Regulating Chambers (Regulator, Float & Sump Chambers)	Remove loose deteriorated concrete if there is any and clean concrete surfaces. Apply repair mortar by Sikatop SF Corporation or equal. If required apply bonding bridge between existing concrete surface and new repair mortar.

APPENDIX B – FLOW REGULATOR DEFICIENCIES

Structure I.D. No./ Location	Type Of Structure	Item	Proposed Remedies
			Bonding bridge coating shall be "Sika Armatec 110" by Sika Corporation or equal. Fill float chamber with lean concrete or flowable fill up to top of regulating chamber base slab. Provide 8" diameter pipe sleeve, completely grouted in the bottom of wall between float chamber and regulating chamber to avoid standing sewage water due to overflow in regulation chamber.
B-9/ Adair and Franklin	Regulating W/Diversion Chamber	Frame and Cover	Remove existing MH steps from regulating chamber and replace with FRP ladder.
		Brickwork Under M.H. Frames	Remove existing brickwork under frames of diversion and sump chambers and replace with concrete block stacks (Conforming to ASTM C-139) of proper height to bring M.H. covers to grade.
		Sludge Buildup	Thoroughly clear sludge and clean concrete surfaces using high-pressure detergent wash and with acid itch.
B-9/ Adair and Franklin	Regulating W/Diversion Chamber	Regulating Chambers (Regulator, Float & Sump Chambers)	Fill float chamber with lean concrete or flowable fill up to top of regulating chamber base slab. Provide 8" diameter pipe sleeve, completely grouted in the bottom of wall between float chamber and regulating chamber to avoid standing sewage water due to overflow in regulation chamber.
		Grating	Provide FRP grating in regulating chamber to access actuator etc.
B-10/ Jos Campau and Franklin Jos Campau and Wright Jos Campau and Atwater	Regulating, BWG Chamber M. Hs. W/Shear Gates	Frames and Covers	Replace heavily corroded frames and cover with new. Modify structure if required to receive new frames.
		Manhole Steps	Remove existing M.H. steps from diversion chamber and replace with new FRP ladder having anti skid rungs after grouting holes in concrete

APPENDIX B – FLOW REGULATOR DEFICIENCIES

Structure I.D. No./ Location	Type Of Structure	Item	Proposed Remedies
			caused by all removal of exist rungs.
		Brickwork Under Manhole Frame	Remove disintegrating brickwork under frames of sump chamber, MH No. 15 and BWG chamber. Replace them with concrete block masonry (conforming to ASTM-139) of proper height to bring MH cover to grade.
		Grating	Remove existing platform from float chamber. Replace in regulating chamber, exist grating with FRP grating to access controls such as actuator etc. Repair all concrete spalls or holes caused by the removal of platforms and steps.
B-10/ Jos Campau and Franklin Jos Campau and Wright Jos Campau and Atwater	Regulating, BWG Chamber M. Hs. W/Shear Gates	Sludge Buildup	Thoroughly clear sludge and clean concrete surfaces using high-pressure detergent wash and with acid itch.
		Regulating Chambers at Franklin (Regulator, Float & Sump Chambers)	Structurally all chambers are in good condition. No structural repair is required. Provide 8” diameter grouted pipe sleeve at the bottom wall between regulator and float chamber to avoid any standing sewage water in float chamber due to overflow in regulator chamber.
		BWG Chamber At Wight	
B-11/ Chene and Franklin	Regulating W/Diversion Chamber	Manhole Steps	Clean M.H. steps in regulator and sump in all the chambers to remove sludge, rust, and other contaminations by wire brush, rotary brush or other mechanical means. Apply corrosion-resistant protective coating “Sikagard 62” by Sika Corporation or “46H-413 Hi-Build Tneme-Tar” by Tnemec Company, Inc. or equal.
		Brickwork	Remove brick courses under all

APPENDIX B – FLOW REGULATOR DEFICIENCIES

Structure I.D. No./ Location	Type Of Structure	Item	Proposed Remedies
		Under M.H. Frames	frames and replace them with concrete block masonry (conforming to ASTM C-139) of proper height to bring M.H. covers to grade.
		Grating	Provide regulator chambers with new corrosion resistant “FRP (Fiberglass Reinforced Plastic) grating Type V” by Nemato Composites, Inc. or “Duradek high strength grating” by MMFG Co. or equal.
		Sludge Buildup	Thoroughly clear sludge and clean concrete surfaces using high-pressure detergent wash and with acid itch.
B-11/ Chene and Franklin	Regulating W/Diversion Chamber	Regulating Chambers (Regulator, Float & Sump Chambers)	Structurally all chambers are in good condition. Fill float chamber with lean concrete or flowable fill up to top of regulating chamber base slab.
B-11/ Chene and Franklin	Regulating W/Diversion Chamber	Regulating Chambers (Regulator, Float & Sump Chambers)	Provide 8” diameter pipe sleeve, completely grouted in the bottom of wall between float chamber and regulating chamber to avoid standing sewage water due to overflow in regulation chamber.
		Diversion Chamber	Additional access M.H. is required for inspection.
		Diversion Dam	Since Diversion dam and diversion chamber are not accessible either form regulating chambers or from top, provide additional precast concrete M.H. with standard frame and cover and FRP M.H. steps. Provide FRP ladder in the chamber.
B-12/Dubois and Franklin	Regulating W/Diversion Chamber	Manhole Steps	Completely clean M.H. steps in regulator and sump chambers to remove rust, sludge, and other contaminants. Apply corrosion resistant protective coating “46h-413 Hi-Build Tneme-Tar” by Tnemec Company, Inc. or “Sikagard 62” by Sika Corporation or equal to protect them from further

APPENDIX B – FLOW REGULATOR DEFICIENCIES

Structure I.D. No./ Location	Type Of Structure	Item	Proposed Remedies
			rusting and corroding.
		Brickwork Under M.H. Frames	Restore spalling brickwork under all frames. Grout epoxy cement at joints and apply cement mortar to finish surface.
		Grating	Remove grating from float chamber no grating required in floating chamber. Provide new FRP grating platform in regulator to access actuator.
		Sludge Buildup	Thoroughly clear sludge and clean concrete surfaces using high-pressure detergent wash and with acid itch.
B-12/Dubois and Franklin	Regulating W/Diversion Chamber	Regulating Chambers (Regulator, Float & Sump Chambers)	Structurally all chambers are in good condition. Fill float chamber with lean concrete or flowable fill up to top of regulating chamber base slab.
B-12/Dubois and Franklin	Regulating W/Diversion Chamber	Regulating Chambers (Regulator, Float & Sump Chambers)	Provide 8” diameter pipe sleeve, completely grouted in the bottom of wall between float chamber and regulating chamber to avoid standing sewage water due to overflow in regulation chamber.
B-13/ St. Aubin and Franklin	Regulating W/Diversion Dam	Manhole Steps	Completely clean M.H. steps in diversion chamber. Apply corrosion resistant protective coating “46H-413” Hi-Build Tneme-Tar by Tnemec Co Inc. or “SIKAGARD 62” by Sika Corporation or equal. M.H. steps/ Ladders in regulating chambers do not need any work.
		Brickwork Under N.H. Frames	Remove existing brickwork under frame in all chambers and replace with new concrete black masonry conforming to ASTM C-139 of proper height to bring MH cover to grade.
		Grating	Provide regulator chamber with new corrosion resistant fibergrid “FRP grating Type V” by Nemato

APPENDIX B – FLOW REGULATOR DEFICIENCIES

Structure I.D. No./ Location	Type Of Structure	Item	Proposed Remedies
			composites Inc. or "Duradek high strength grating" by MMFG Co. or equal.
		Sludge Buildup	Thoroughly clear sludge and clean concrete surfaces using high-pressure detergent wash and with acid itch.
		Regulating Chambers (Regulator, Float & Sump Chambers)	Fill float chamber with lean concrete or flowable fills up to top of regulating chamber base slab. Provide 8" diameter pipe sleeve, completely grouted in the bottom of wall between float chamber and regulating chamber to avoid standing sewage water due to overflow in regulation chamber.
B-14/ Orleans and Franklin	Regulating W/Diversion Chamber	Frames and Covers	Replace all deteriorating manhole frames and covers with standard heavy duty M.H. frames and covers manufactured by east Jordan Iron Works, Inc. or equal.
B-14/ Orleans and Franklin	Regulating W/Diversion Chamber	Frames and Covers	Modify exist structure as required to receive new frames.
		Brickwork under M.H. Frames	Remove existing brick courses under all frames and replace with concrete block masonry (conforming to ASTM C-139) of proper height to bring M.H. Covers to grade.
		Grating	Provide regulator chambers with new corrosion resistant "FRP (Fiberglass reinforced plastic) grating Type V" by Nemato Composites, Inc. or "Duradek high strength grating" by MMFG co. or equal.
		Sludge Buildup	Thoroughly clear sludge and clean concrete surfaces using high-pressure detergent wash and with acid itch.
		Regulating Chambers (Regulator, Float & Sump Chambers)	Fill float chamber with lean concrete or flowable fill up to top of regulating chamber base slab. Provide 8" diameter pipe sleeve, completely grouted in the bottom of wall between float chamber and regulating chamber to avoid standing sewage water due to overflow in regulation chamber.
B-15/ Orleans Relief	Dam Chamber	Brickwork	Replace existing brickwork under

APPENDIX B – FLOW REGULATOR DEFICIENCIES

Structure I.D. No./ Location	Type Of Structure	Item	Proposed Remedies
(Franklin & Orleans)	/ Structure	Under M.H. Frame	manhole frame with concrete block masonry of proper height to take care of settling pavement and to bring M.H. cover to grade.
		Sludge Buildup	Thoroughly clear sediments and debris using high-pressure detergent wash.
		Flashboards	Remove exist 2" x4" stop logs and replace them with 4" x 4" logs I the same quantity.
B-16/ Riopelle and Franklin	Regulating W/Diversion Chamber	Brickwork Under M.H. Frames	Remove existing deteriorating brick courses under all frames and replace with concrete block masonry (Conforming to ASTM C-139) of Proper Height to take care of settling pavement around and to bring M.H. covers up to grade level.
B-16/ Riopelle and Franklin	Regulating W/Diversion Chamber	Grating	Provide regulator chambers with new corrosion resistant fibergrid "FRP (Fiberglass reinforced plastic) grating Type V" by Nemato Composites Inc. or "Durakek High Strength Grating" by MMFG Co. or equal. To access controls such as actuators etc.
		Sludge Buildup	Thoroughly clear sludge and clean concrete surfaces using high-pressure detergent wash with acid itch. Fill float chamber with lean concrete or flowable fills up to top of regulating chamber base slab.
		Regulating chambers (Regulator, float and sump chambers)	Provide 8" diameter pipe sleeve, completely grouted in the bottom of wall between float chamber and regulating chamber to avoid standing sewage water due to overflow I regulation chamber.
		Frames and Covers	Repair Pavement around frame.
B-17/ Rivard and Franklin	Regulating W/BWG Chamber	Manhole Steps	Provide new FRP ladder having anti skid rungs in the access M.H. over sump trough to allow access to

APPENDIX B – FLOW REGULATOR DEFICIENCIES

Structure I.D. No./ Location	Type Of Structure	Item	Proposed Remedies
			backwater gates.
		Brickwork Under M.H. frames	No structural work is required. However chip off rough edges of concrete for smooth access to BWG Chamber.
		Grating	Remove existing grating from both float and regulator chamber. Replace regulator grating in regulator chamber with new corrosion resistant fibergrid “FRP (Fiberglass reinforced plastic) grating type “V” by Nemato Composites Inc. Or “Duradek high strength grating” MMFG Co or equal.
		Sludge Buildup	Thoroughly clear sludge and clean concrete surfaces using high-pressure detergent wash and with acid itch.
B-17/ Rivard and Franklin	Regulating W/BWG Chamber	Regulating Chambers (Regulator, float, & Sump Chambers)	Fill float chambers with lean concrete or flowable fill up to top of regulating chamber base slab. Provide 8” pipe sleeve, completely grouted in the bottom of wall between float chamber and regulating chamber to avoid standing sewage water due to overflow in regulation chamber.
B-18/ Schweizer Place and Franklin	Regulating W/Diversion Chamber	Manhole Steps	Remove existing M.H. steps from diversion chambers and replace with new FRP ladders having anti skid rungs after grouting holes caused by removal of existing rungs.
		Brickwork under M.H. Frames	Add brick courses as required to bring manhole cover to grade. Grout epoxy cement in brick joints and apply cement mortar to finish surface.
		Grating	Remove existing grating from regulator and float chamber and replace with new corrosion resistant fibergrid “FRP (Fiberglass reinforced plastic) grating type “V” by Nemato composites Inc. or “Duradek high strength grating” by MMFG Co. or equal.
		Sludge Buildup	Thoroughly clear sludge and clean concrete surfaces using high-pressure detergent wash with acid itch.

APPENDIX B – FLOW REGULATOR DEFICIENCIES

Structure I.D. No./ Location	Type Of Structure	Item	Proposed Remedies
		Regulating Chambers (Regulator, Float,& Sump Chambers)	Fill float chamber with lean concrete or flowable fill up to top of regulating chamber to avoid standing sewage water due to overflow in regulation chamber.
B-19/ Randolph and Woodbridge	Regulating W/BWG Chamber	Manhole Steps	Remove existing M.H. steps from regulator and sump chamber and replace them with new FRP ladder having anti skid rungs after grouting holes caused by removal of existing rungs.
B-19/ Randolph and Woodbridge	Regulating W/BWG Chamber	Grating	Provide regulator float chamber with new corrosion resistant fibergrid “FRP (Fiberglass Reinforced Plastic) grating type V’” by Nemato composites Inc. Or “ Duradek high strength grating” by MMFG Co. or equal.
		Sludge Buildup	Thoroughly clear sludge and clean concrete surfaces using high-pressure detergent wash and with acid itch.
		Regulating Chambers (Regulator, Float and Sump Chambers)	Thoroughly clean deteriorating concrete surfaces in sump chamber to remove sludge, grease, and other contaminations. Apply cement mortar to finish surface. Apply bonding bridge if required between existing concrete and new cement mortar. Provide 8” diameter grouted pipe at the bottom of wall between regulator and float chamber to avoid any standing sewage water in float chamber due to overflow in regulator chamber.
B-20/ Bates and Jefferson	Regulating	Manhole Steps	Refurbish M.H. steps below S.S. Ladder in Inlet chamber and all steps in regulator chamber. Clean to remove all corrosion and other contaminations. Coat them with corrosion resistant

APPENDIX B – FLOW REGULATOR DEFICIENCIES

Structure I.D. No./ Location	Type Of Structure	Item	Proposed Remedies
			protective coating " Sikagard 62" by Sika Corporation Or "46H-413 Hi build Tneme-tar" by Tnemec company, Inc. or equal to protect them from further corroding.
		Concrete below frames	Grout epoxy cement in brick joints and apply cement mortar to finish surface.
B-20/ Bates and Jefferson	Regulating	Grating	Remove existing grating from float chamber. Provide regulator and inlet chambers with corrosion resistant fibergrid "FRP grating type V" by Nemato composite Inc. Or " Duredek high strength grating" by MMFG co. or equal. Locate grating for access to controls such as actuator etc.
		Sludge Buildup	Thoroughly clear sludge and clean concrete surface using high-pressure detergent wash and with acid itch.
		Regulating Chambers (Regulating, Float, & Slump chambers	Provide 8" diameter grouted pipe at the bottom of wall between regulator and float chamber to avoid any standing sewage water in float chamber due to overflow in regulator chamber.
B-21/ Woodward and Woodbridge	Regulating	Manhole Steps	Refurbish M.H. Steps in regulator and sump chambers. Thoroughly clean steps to remove rust, sludge, and other contaminations due to the of sewage and sulfide gases. Apply corrosion resistant protective coating "Sikagard 62" by Sika corporation or "46H-413 Hi-Build Tneme-Tar" by Tnemec company, Inc. or equal.
		Grating	Remove existing grating from regulator and sump chambers and replace with new corrosion resistant fibergrid "FRP grating type V" by Nemato composites Inc. or "Duradek High strength grating" by MMFG Co. or equal.

APPENDIX B – FLOW REGULATOR DEFICIENCIES

Structure I.D. No./ Location	Type Of Structure	Item	Proposed Remedies
		Sludge Buildup	Cleaning of structure in general is recommended.
B-22/ Hart Plaza/ Griswold and Woodbridge	Regulating W/BWG chamber	Manhole Steps	Provide FRP ladder having anti skid rungs from existing grating level to the bottom of sump chamber.
		Grating	Remove existing gratings from all chambers. Replace gratings in regulating and sump chambers with new fibergrid "FRP grating type V" by Nemato composites Inc. or "Duradek High strength grating" by MMFG Co. or equal. Repair holes and spalls caused by removal of platforms.
		Sludge Buildup	Thoroughly clear sludge and clean concrete surfaces using high-pressure detergent wash and with acid itch.
		Regulating chambers (Regulator, Float, & Sump Chambers)	Fill float chamber with lean concrete or flowable fills up to top of regulating chamber base slab. Provide 8" diameter pipe sleeve, completely grouted in the bottom of wall between float chamber and regulating chamber to avoid standing sewage water due to overflow in regulation chamber.
B-24/ Third and Jefferson	Regulating with BWG Chamber	Manhole Steps	Refurbish M.H. steps in regulator chamber. Thoroughly clean and remove rust and other contaminations from the steps. Apply corrosion resistant protective coating 46H-413 Tneme-tar by Tnemec company Inc. or equal "Sikagard 62" by Sika corporation or equal. Remove all M.H. steps from sump chamber and replace with FRP ladder with anti skid rungs anchor ladder to wall and floor. Grout all holes and spills caused by removal of existing steps.
B-24/ Third and	Regulating	Brickwork	Grout epoxy cement "Seceder 32, Hi-

APPENDIX B – FLOW REGULATOR DEFICIENCIES

Structure I.D. No./ Location	Type Of Structure	Item	Proposed Remedies
Jefferson	with BWG Chamber	under M.H. frames	Mod" by Sika Corporation or equal in stack joints and apply cement mortar to finish surface.
		Grating	Provide regulator chambers with new corrosion resistant "FRP grating Type V'" by Nemato composites Inc. Or "Duradek high strength grating" by MMFG Co. or equal. Remove existing grating from float chamber.
		Sludge Buildup	Thoroughly clear sludge and clean concrete surfaces using high-pressure detergent wash and with acid itch.
		BWG Chamber	No structural repair of chamber is required. However back water gates need to be sealed to prevent backflow from river. Remove all the debris to properly seal the gate.
B-25/ Cabacier and West Jefferson	Diversion Dam Structure	Manhole Steps	Replaced existing M.H. steps with new FRP ladder having anti skid rungs grout all holes caused by removal of existing rungs.
		Brickwork under M.H. Frame	Grout epoxy cement "Seceder 32, Hi-Mod" by Sika corporation or equal in stack joints and apply cement mortar to finish surface.
		Sludge Buildup	Thoroughly clear sludge and clean concrete surfaces using high-pressure detergent wash and with acid itch.
		Diversion Dam Structure	Remove sediments and debris from the bottom of chamber. Remove loose and damaged portion of concrete if any apply bonding bridge "Epoxy cement Sika Armatec 110" by Sika corporation or equal if required. Apply cement mortar Sikatop SF or equal to finish floor level. Immediate restoring of severely eroded influent sewer is recommended.
B-26/ Eleventh St. and West Jefferson	Regulating W/Diversion	Frames and	Replace all corroding M.H. frames and covers with standard heavy duty M.H.

APPENDIX B – FLOW REGULATOR DEFICIENCIES

Structure I.D. No./ Location	Type Of Structure	Item	Proposed Remedies
	Chamber	Covers	frames and covers manufactured by east Jordan Iron works, Inc. Or equal. Modify existing structure to receive new manhole frames and cover.
		Manhole steps	Refurbish M.H.Steps in regulating and sum chambers. Thoroughly clean to remove rust, sludge, and other contaminations. Apply corrosion resistant protective coating “Sikagard 62” by Sika corporation or 46H-413 Hi Build Tneme-Tar” by Tnemec company, Inc. or equal.
		Brickwork under M.H. frames	Remove existing deteriorating brick courses under all frames and replace them with concrete block-masonry stacks (conforming to ASTM C-139) of proper height to bring M.H. covers to grade.
B-26/ Eleventh St. and West Jefferson	Regulating W/Diversion Chamber	Grating	Provide regulator chamber with new corrosion resistant fibergrid “FRP grating type V’” by Nemato composites Inc. or “Duradek high strength grating” by MMFG Co. Or equal.
		Sludge Buildup	Thoroughly clear sludge and clean concrete surfaces using high-pressure detergent wash and with acid itch.
		Regulating Chambers (Regulator, Float, & Sump Chambers)	Fill float chamber with lean concrete or flowable fill up to top or regulating chambers base slab. Provide 8” diameter pipe sleeve, completely grouted in the bottom of wall between float chamber and regulating chamber to avoid standing sewage water due to overflow in regulation chamber.
		Flashboards	No repair work or replacement of flashboards is needed. However, make good contact between top of dam surface and bottom of flashboards.
B-27/ Rosa Park Boulevard and West	Regulating W/Diversion	Manhole Steps	Refurbish M.H. Steps in, Sump, and Diversion Chambers.

APPENDIX B – FLOW REGULATOR DEFICIENCIES

Structure I.D. No./ Location	Type Of Structure	Item	Proposed Remedies
Jefferson Avenue	Chamber		Thoroughly clean M.H. Steps to remove Rust, Sludge, and other contaminations. Apply corrosion resistant protective coating “46H-413 Hi build Tneme-Tar” by Tnemec company, Inc. Or “Sikagard 62” by Sika Corporation or equal.
		Brickwork under M.H. Frames	Remove loose bricks and mortar. Grout epoxy cement “Seceder 32, Hi-Mod” by Sika Corporation or equal in Loose joints. Apply cement mortar to finish surface.
		Grating	Remove existing grating from float and regulator chambers. Replace grating in regulator chamber wit new corrosion resistant “FRP Grating Type V” by Nemato composites Inc. or “Duradek High strength grating” by MMF Co. or equal to access controls such as actuator etc.
		Sludge Buildup	Thoroughly clear sludge and clean concrete surfaces using high-pressure detergent wash and with Acid itch.
		Regulating Chambers (Regulators, Float, & Sump Chambers)	Fill float chamber with lean concrete or flowable fill up to top of regulating chambers base slab. Provide 8” diameter pipe sleeve, completely grouted in the bottom of wall between float chamber and regulating chamber to avoid standing sewage water due to overflow in regulation chamber.
B-28/ Fourteenth Street and West Jefferson Avenue	Regulating with Diversion Chamber	Frames and Covers	Replace all deteriorating manhole frames and covers with standard heavy duty M.H. frames and covers manufactured by East Jordan Iron works, Inc. or Equal. Modify exist structures as required to receive new frames and covers.
B-28/ Fourteenth Street and West Jefferson Avenue	Regulating with Diversion Chamber	Manhole Steps	Remove existing M.H. steps from sump chamber and replace with new FRP ladder with anti skid rungs after grouting holes caused by removal of existing rungs.

APPENDIX B – FLOW REGULATOR DEFICIENCIES

Structure I.D. No./ Location	Type Of Structure	Item	Proposed Remedies
			Refurbish M.H steps in diversion chamber. Thoroughly clean steps to remove dust, sludge, grease, and other contaminations, apply corrosion resistant protective coating “Sikagard 62” by Sika Corporation or “46H-413 Hi Build Tneme-Tar” by Tnemec company, Inc. or equal.
		Brickwork under M.H. frames	Remove spalling bricks and loose mortar. Grout by epoxy cement “Seceder 32 Hi Mod” by Sika corporation in loose joints. Apply cement mortar to finish surface.
		Grating	Remove existing grating from regulator chamber and float chambers. Replace grating in regulator chamber with new fibergrid “FRP (Fiberglass Reinforced Plastic) grating type V” by Nemato composites Inc. Or “Duradek high strength grating” by MMFG Co or equal to access controls such as actuator.
		Sludge Buildup	Cleaning of structure in general is recommended.
		Regulating Chambers (Regulator, Float, & Sump Chambers)	Fill Float chamber with lean concrete or flowable fill up to top of regulating chamber base slab. Provide 8” diameter pipe sleeve, completely grouted in the bottom of wall between float chamber and regulating chamber to avoid standing sewage water due to overflow in regulation chamber.
B-29/ Eighteenth Street and West Jefferson Avenue	Regulating W/Diversion Chamber	Brickwork Under M.H. Frames	Remove existing brick courses, which show sign of deterioration and replace them with concrete block masonry. Match top of MH cover with top of pavement grade.
		Grating	Remove grating from float chamber. Replace grating in regulator if required

APPENDIX B – FLOW REGULATOR DEFICIENCIES

Structure I.D. No./ Location	Type Of Structure	Item	Proposed Remedies
			to access actuator.
		Sludge Buildup	Thoroughly clear sludge and clean concrete surfaces using high-pressure detergent wash and with acid itch.
		Regulating Chambers (Regulator, Float , & Sump chambers)	Fill float chamber with lean concrete or flowable fill up to top of regulating chambers base slab. Provide 8" diameter pipe sleeve, completely grouted in the bottom of wall between float chamber and regulating chamber to avoid standing sewage water due to overflow in regulation chamber.
B-30/ Twenty-First Street and West Jefferson Avenue	Regulating W/BWG Chamber	Brickwork under M.H. Frames	Remove loose and spalling bricks. Grout epoxy cement "Seceder 32 Hi Mod" by Sika corporation or equal in loose joints. Apply cement mortar to finish surface.
		Grating	Remove grating from float and regulator chambers; provide regulator chamber with new corrosion resistant fibergrid "FRP (Fiberglass Reinforced Plastic) grating type V" by Nemato composites Inc. Or "Duradek high strength grating" by MMFG Co or equal to access controls such as actuator etc.
		Sludge Buildup	Thoroughly clean sludge and grease and clean concrete surfaces using high-pressure detergent wash and with acid itch.
B-30/ Twenty-First Street and West Jefferson Avenue	Regulating W/BWG Chamber	Regulating Chambers (Regulator, Float, & Sump Chambers)	Remove all loose and deteriorated concrete from sump chamber by mechanical means as approved by engineer. Completely remove all contaminants. If required apply bonding bridge "Sika Armatec 110" by Sika corporation or equal between existing concrete and new repair mortar. Apply repair mortar Sikatop SF or equal as per manufacturer recommendations.

APPENDIX B – FLOW REGULATOR DEFICIENCIES

Structure I.D. No./ Location	Type Of Structure	Item	Proposed Remedies
			To avoid future deterioration of concrete surfaces apply Isoflex 611 sealant coating" by Harry-Peterson company or "Heavy duty black high build coal-tar solution" by Tnemec company, Inc. Or equal. Fill float chamber with lean concrete or flowable fill up to top of regulating chambers base slab. Provide 8" diameter pipe sleeve, completely grouted in the bottom of wall between float chamber and regulating chamber to avoid standing sewage water due to overflow in regulation chamber.
B-31/ Twenty-Fourth Street and West Jefferson	Regulating with Diversion Chamber	Manhole Steps	Refurbish M.H. Steps in sump and diversion chambers. Sandblast M.H.steps to remove rust, sludge and other contamination. Apply corrosion resistant protective coating "46H-413 Hi build Tneme-tar" by Tnemec company, Inc. or "Sikagard 62" by Sika corporation or equal.
		Brickwork Under M.H. frames	Remove all brickwork under M.H. frames and replace with concrete block masonry (conforming to ASTM-C139). Modify existing structure if required to receive these blocks. Match top of cover with top of pavement.
B-31/ Twenty-Fourth Street and West Jefferson	Regulating with Diversion Chamber	Grating	Remove existing grating from float chamber. Provide regulator chamber with new corrosion resistant fibergrid "FRP granting type V" by Nemato composite Inc. or "Duradek high strength grating" by MMFG Co. or equal to access controls such as actuator etc. Repair all concrete spalls caused by removal of grating in regulator chamber.
		Regulating	Fill float chamber with lean concrete or flowable fills up to top of regulating

APPENDIX B – FLOW REGULATOR DEFICIENCIES

Structure I.D. No./ Location	Type Of Structure	Item	Proposed Remedies
		Chambers	chamber base slab.
		Regulator, Float & Sump Chambers	Provide 8" diameter pipe sleeve, completely grouted in the bottom of wall between float chamber and regulating chamber to avoid standing sewage water due to overflow in regulation chamber.
B-32/ West Grand Boulevard and West Jefferson Avenue	Regulating with BWG Chamber	Grating	Remove grating in float chamber. Repair all concrete spalls caused by removal of grating and supporting members.
		Sludge Buildup	Thoroughly clear sludge and clean concrete surfaces using high-pressure detergent wash and with acid itch.
		Regulating Chambers (Regulator, Float & Sump Chambers)	Fill float chamber with lean concrete or flowable fills up to top of regulating chamber base slab. Provide 8" diameter pipe sleeve, completely grouted in the bottom of wall between float chamber and regulating chamber to avoid standing sewage water due to overflow in regulation chamber.
B-33/ Swain and West Jefferson Avenue	Regulating W/Flashboards	Frames and Covers	Replace existing M.H. frames and covers over both regulator and sump chambers with standard heavy duty M.H. frames and covers manufactured by East Jordan Iron works, Inc or equal.
B-33/ Swain and West Jefferson Avenue	Regulating W/Flashboards	Concrete work under frames	Replace existing brickwork with concrete blocks if required to receive new MH frame and cover. Modify structure accordingly.
		Grating	Remove grating from float and regulator chamber. Provide regulator chamber with new corrosion resistant fibergrid "FRP grating Type V" by Nemato composites Inc. Or "Duradek high strength grating" by MMFG Co. or equal to access control such as actuator. Repair all concrete spalls caused by removal of existing gratings.

APPENDIX B – FLOW REGULATOR DEFICIENCIES

Structure I.D. No./ Location	Type Of Structure	Item	Proposed Remedies
		Regulating Chambers (Regulator, Float & Sump Chambers)	Fill float chamber with lean concrete or flowable fills up to top of regulating chamber base slab. Provide 8" diameter pipe sleeve, completely grouted in the bottom of wall between float chamber and regulating chamber to avoid standing sewage water due to overflow in regulation chamber.
B-35/ Mckinstry and West Jefferson Avenue	Regulating with diversion chamber	Manhole steps	Refurbish M.H. Steps in regulator, sump and diversion chambers. Remove rust and other contaminants completely. Apply corrosion resistant protective coating "46H-413 Hi-Build Tneme-tar by Tnemec company Inc or equal on exposed bottom portions of frames and covers to protect them from further corroding.
		Brickwork Under M.H. Frames	Remove all loose bricks and mortar. Grout epoxy cement "Seceder 32 Hi-Mod" by Sika corporation or equal in cracks and joints. Apply cement mortar to finish surface.
B-35/ Mckinstry and West Jefferson Avenue	Regulating with diversion chamber	Grating	Remove grating from float chamber. Replace grating in regulator chamber with new FRP grating if required to access actuator. Repair all concrete spalls caused by removal of existing grating.
		Sludge Buildup	Thoroughly clear sludge and grease and clean concrete surface using high-pressure detergent wash and with acid itch.
		Regulating Chambers (Regulator, Float & Sump Chambers)	Fill float chamber with lean concrete or flowable fills up to top of regulating chamber base slab. Provide 8" diameter pipe sleeve, completely grouted in the bottom of wall between float chamber and regulating chamber to avoid standing sewage water due to overflow in

APPENDIX B – FLOW REGULATOR DEFICIENCIES

Structure I.D. No./ Location	Type Of Structure	Item	Proposed Remedies
			regulation chamber.
		Diversion Chamber	Remove all loose and deteriorated concrete below the invert of pipes and sump trough. Where reinforcing steel with corrosion is encountered, remove all contaminants and rust completely with rotary wire brush or other mechanical means. Splice rebars if loss of cross section of rebars is more than 20 percent. Apply bonding bridge “Epoxy cement Sika Armatec 110” by Sika corporation or equal on the prepared surfaces. Apply repair mortar Sikatop SF or equal as per manufacturer recommendations to finish surface. To avoid future erosion of concrete apply “Isoflex 611” protective coating by Harry-Peterson company or “Sikagard 62” by Sika Corporation or “46H-413 Hi Build Tneme-Tar” by Tnemec Company Inc. Or equal.
B-36/ Clark Avenue and West Jefferson Avenue`	Regulating	Frames and Covers	Remove frame and cover over sump chamber and replace with new heavy-duty standard frame and cover manufactured by East Jordan Iron Works Inc. or equal.
		Manhole Steps	Refurbish all M.H, Steps in regulator chamber. Remove rust, sludge and grease completely by any mechanical method. Apply corrosion resistant protective coating “46H-413 Hi build Tneme-Tar” by Tnemec company, Inc. Or “Sikagard 62” by Sika Corporation or equal.
		Brickwork under M.H. frames	Remove loose and spalling portion of brick courses. Grout epoxy cement “Seceder 32 Hi-Mod” by Sika corporation or equal in cracks and brick joints.

APPENDIX B – FLOW REGULATOR DEFICIENCIES

Structure I.D. No./ Location	Type Of Structure	Item	Proposed Remedies
			Apply cement mortar to finish surface.
		Grating	Remove existing grating from all the chambers and replace with new corrosion resistant FRP grating in regulator and sump chambers. All grating used shall be "Duradek high strength grating" by MMFG Co or "Fibergrid FRP grating Type V" by Nemato Composites Inc. or equal to access controls such as actuators.
		Sludge Buildup	Thoroughly clear sludge and clean concrete surfaces using high-pressure detergent wash and with acid itch.
		Regulating chambers (Regulator, Float & Sump Chambers)	Fill float chamber with lean concrete or flowable fill up to top of regulating chamber base slab. Provide 8" diameter pipe sleeve, completely grouted in the bottom of wall between float chamber and regulating chamber to avoid standing sewage water due to overflow in regulation chamber.
B-37/ Ferdinand Street and West Jefferson Avenue	Regulating W/Diversion chamber	Manhole Steps	Provide new FRP ladder in regulator chamber. Refurbish all M.H. steps in sump and regulator chambers. Remove all corrosion and other contaminations. Apply corrosion resistant protective coating "46H-413 hi build Tneme-Tar" by Tnemec company Inc. Or "Sikagard 62" by Sika corporation, or equal.
		Brickwork under M.H. Frames	Clean all mortar joints and grout epoxy cement in them. Apply cement mortar to finish surface.
		Grating	Remove grating from float and regulator chambers. Provide regulator chamber with new fibergrid "FRP (Fiberglass Reinforced Plastic) grating type V" by Nemato composites Inc. or "Duradek High Strength Grating" by MMFG Co or

APPENDIX B – FLOW REGULATOR DEFICIENCIES

Structure I.D. No./ Location	Type Of Structure	Item	Proposed Remedies
			equal to access controls such as actuators etc. Repair all concrete spalls caused by removal of existing grating.
		Regulator Chambers (Regulator, Float & Sump Chambers)	Fill float chamber with lean concrete or flowable fills up to top of regulating chamber base slab. Provide 8" diameter pipe sleeve, completely grouted in the bottom of wall between float chamber and regulating chamber to avoid standing sewage water due to overflow in regulation chamber.
		Diversion Chamber	At ceiling around access opening in diversion chamber apply bounding bridge "Sika Armatec 110" or equal between existing concrete surface and new repair mortar. Apply repair mortar "Sikatop SF" or equal to finish surface.
B-38/ Morrel Street and West Jefferson Avenue	Regulating with BWG Chambers	Manhole Steps	Remove all M.H. steps in regulator and BWG chambers and replace with FRP ladders with anti skid rungs. Extend existing ladder down to the bottom of sump chamber by FRP ladder with anti-skid rungs. Grout all holes caused by removal of existing steps.
		Grating	Remove existing grating from both regulator and float chambers and replace in regulator chamber with new corrosion resistant fibergrid "FRP grating Type V" by Nemato composites Inc. Or "Duradek high strength grating" by MMFG Co or equal. To access control such as actuator etc. Repair all concrete spalls caused by removal of existing grating.
		Sludge Buildup	Thoroughly clear sludge and clean concrete surfaces using high-pressure detergent wash and with acid itch.

APPENDIX B – FLOW REGULATOR DEFICIENCIES

Structure I.D. No./ Location	Type Of Structure	Item	Proposed Remedies
		Regulating Chambers (Regulator, Float & Sump Chambers)	Fill float chamber with lean concrete or flowable fill up to top of regulating chamber base slab. Provide 8" diameter pipe sleeve, completely grouted in the bottom of wall between float chamber and regulating chamber to avoid standing sewage water due to overflow in regulation chamber.
B-39/ Junction Avenue and West Jefferson Avenue	Regulating W/BWG Chambers	Frames and Covers	Remove existing frames and covers over all access openings and replace with new heavy duty standard frames and covers manufactured by East Jordan Iron Works, Inc. or equal.
B-39/ Junction Avenue and West Jefferson Avenue	Regulating W/BWG Chambers	Manhole Steps	Remove existing M.H. steps from sump, and BWG Chambers and replace with new FRP ladders with anti-skid rungs. Anchor new ladders to walls and floor per manufacturer's connection details as approved by engineer. Grout holes in concrete caused by removal of existing steps.
		Brickwork Under M.H. Frames	Remove existing brickwork under all frames and replace with concrete blocks (conforming to ASTM C-139) match top of cover with top of pavement / grade. Modify structure if required to receive new concrete blocks.
		Grating	Remove existing grating from float and sump chambers and in sump chamber replace with new fibergrid "FRP Grating Type V" by Nemato Composites Inc. or "Duradek High Strength Grating" by MMFG Co. or equal, to access actuator.
		Sludge Buildup	Thoroughly clear sludge and clean concrete surfaces using high-pressure detergent wash and with acid itch.
		Regulating Chambers (Float and Sump	At upper level, where sluice gate operators are remove existing rusted metal door and frame and replace with new metal door and frame.

APPENDIX B – FLOW REGULATOR DEFICIENCIES

Structure I.D. No./ Location	Type Of Structure	Item	Proposed Remedies
		Chambers)	
		BWG Chamber	No structural repair or chamber is required. However, backwater gates are leaking. Need to be repaired to prevent backflow of water from river.
B-40/ Campbell and West Jefferson Avenue	Regulating with Diversion Chambers	Frames and Covers	Remove existing frames and covers over regulator and sump chambers and replace with new heavy duty standard frames and covers manufactured by East Jordan Iron Works, Inc. or equal.
		Manhole Steps	Remove existing M.H. steps from regulator chamber and replace with new FRP ladder with anti-skid rungs. Grout all holes caused by removal of existing steps.
		Brickwork Under M.H. Frames	Remove all existing brickwork under frames in regulator and sump chambers and replace with concrete block masonry (Conforming to ASTM C-139) of proper height to bring M.H. covers to surrounding concrete level. Modify existing structure if required to receive new blocks.
		Grating	Remove existing grating and framework from all the regulating chambers and replace grating in regulator and sump chambers with new corrosion resistant fibergrid “FRP (Fiberglass reinforced Plastic) grating Type V” by NEMATO Composites Inc. or “Duradek High Strength Grating” by MMFG Co. or equal. Repair all concrete spalls caused by removal of existing grating.
		Sludge Buildup	Thoroughly clear sludge and clean concrete surfaces using high-pressure detergent wash and with acid itch.
		Regulating Chamber	Fill float chamber with lean concrete or flowable fill up to top of regulating chambers base slab.

APPENDIX B – FLOW REGULATOR DEFICIENCIES

Structure I.D. No./ Location	Type Of Structure	Item	Proposed Remedies
		s (Regulator, Float & Sump Chambers)	Provide 8" diameter pipe sleeve, completely grouted in the bottom of wall between float chamber and regulating chamber to avoid standing sewage water due to overflow in regulation chamber.
B-41/ Livernois and West Jefferson Avenue	Regulating W/BWG Chamber	Manhole Steps	In regulator and sump chambers, remove M.H. steps below grating and replace them with FRP ladders with anti-skid rungs. Anchor all ladders to walls and floor per manufacturer's connection detail as approved by engineer. Repair concrete spalls caused by removal of existing steps.
		Brickwork Under M.H. Frames	Restore deteriorating brickwork under all frames. Grout epoxy cement "Seceder 32 Hi-Mod" by Sika Corporation or equal in mortar joints. Apply cement mortar to finish surface.
		Grating	Remove existing grating from float and sump chambers. Replace grating in sump chamber with new fibergrid "FRP grating Type V" by Nemato Composites Inc. or "Duradek High Strength Grating" by MMFG Co. or equal. In regulator chamber locate grating to provide access to actuator. Repair all concrete spalls caused by removal of existing grating and framework.
		Sludge Buildup	Thoroughly clear sludge and clean concrete surfaces using high-pressure detergent wash and with acid itch.
		Regulating Chambers (Regulator, Float & Sump	Fill float chamber with lean concrete or flowable fill up to top of regulating chamber base slab. Provide 8" diameter pipe sleeve, completely grouted in the bottom of wall between float chamber and

APPENDIX B – FLOW REGULATOR DEFICIENCIES

Structure I.D. No./ Location	Type Of Structure	Item	Proposed Remedies
		Chambers)	regulating Chamber to avoid standing sewage water due to overflow in regulation chamber.
B-42/ Schroeder Avenue and West Jefferson Avenue	Regulating with Diversion Chamber	Brickwork Under M.H. Frames	Restore deteriorating brickwork under all frames. Grout epoxy cement “Seceder 32 Hi-Mod” by Sika Corporation or equal in mortar joints. Top coat cement mortar to finish surface.
		Grating	Remove existing grating and framework from both regulator and float chambers. Replace grating in regulator chamber with new fibergrid “FRP grating Type V” by Nemato Composites Inc. or “Duradek High Strength Grating” by MMFG Co. or equal to access controls such as actuator etc. repair concrete spalls etc. caused by removal of existing platforms.
		Sludge Buildup	Thoroughly clear sludge and clean concrete surfaces using high-pressure detergent wash and with acid itch.
		Regulating Chambers (Regulator, Float & Sump Chambers)	Fill float chamber with lean concrete or flowable fills up to top of regulating chamber base slab. Provide 8” diameter pipe sleeve, completely grouted in the bottom of wall between float chamber and regulating chamber to avoid standing sewage water due to overflow in regulation chamber.
B-44/ Cary Avenue and West Jefferson Avenue	Regulating	Manhole Steps	Refurbish M.H. steps in and regulator chamber remove rust and other contaminants completely. Apply corrosion resistant protective coating “46h-413” Hi-Build Tneme-Tar” by Tnemec Co. Inc. or “Sikagard 62” by Sika Corporation or equal.
		Brickwork Under M.H. Frames	Grout epoxy cement, “Seceder 32” by Sika Corporation or equal, in brick joints and top coat brickwork with cement mortar to finish surface.

APPENDIX B – FLOW REGULATOR DEFICIENCIES

Structure I.D. No./ Location	Type Of Structure	Item	Proposed Remedies
B-44/ Cary Avenue and West Jefferson Avenue	Regulating	Grating	Remove existing grating from regulator and float chambers. Replace grating in regulator chamber with new "FRP grating Type V" by Nemato Composites Inc. or "Duradek High Strength Grating" by MMFG Co. or equal to access actuator. Repair all concrete spalls caused by removal of existing concrete.
		Sludge Buildup	Thoroughly clear sludge and clean concrete surfaces using high-pressure detergent wash and with acid itch.
		Regulating Chambers (Regulator, Float & Sump Chambers)	Remove all loose and deteriorated concrete in sump chamber by mechanical means as approved by engineer. Where reinforcement with corrosion is encountered remove rust and other contaminations. Completely apply bonding coat if required between existing and repair mortar. Bonding coating shall be "Armatec 110" by Sika Corporation or equal. Apply repair mortar Sikatop SF or equal to finish surface as per manufacturer recommendations. To avoid future deterioration of concrete from the contact of raw sewage and sulfide gases apply "Isoflex 611 coating " by Harrys-Peterson Company or heavy duty black high build coal-tar solution by Tnemec Company, Inc. or equal. Fill float chamber with lean concrete or flowable fill up to top of regulating chamber base slab. Provide 8" diameter pipe sleeve, completely grouted in the bottom of wall between float chamber and regulating chamber to avoid standing sewage water due to overflow in regulation chamber.
B-44/ Cary Avenue and West Jefferson Avenue	Regulating	Diversion Chamber	Same as for Sump Chamber.

APPENDIX B – FLOW REGULATOR DEFICIENCIES

Structure I.D. No./ Location	Type Of Structure	Item	Proposed Remedies
B-45/ Dearborn and West Jefferson Avenue	Sluice Gate Chamber W/BWG Chambers	Brickwork under M.H. frame	Repair brickwork under M.H. frame. Grout epoxy cement in brick joint and top coat brick surface with cement mortar.
		Sludge Buildup	Clear sludge and clean concrete surfaces using high-pressure detergent wash and with acid itch.
B-46/ Carbon and Rouge River	Diversion Chamber W/Back Water Gate	Manhole Steps	Thoroughly clean existing M.H. steps. Remove all rust and contamination. Apply corrosion resistant protective coating “Sikagard 62” by Sika Corporation or “46H-413 Hi-Build Tnemec Tar” by Tnemec co., Inc. or equal. In addition to protecting existing steps, extend them by adding new steps down to the bottom of chamber. New M.H. steps shall be “PS1 Manhole Steps” by M.A. Ind., Inc. or equal.
		Manhole Cone	Remove mineral deposits around the access opening at ceiling level. If concrete below mineral deposits is eroded, blast clean concrete surface and apply repair mortar Sikatop SF to finish surface. If required apply a bonding bridge “Sika Armatec 110” between concrete surface and Sikatop SF mortar.
		Sludge Buildup	Scrap all mineral deposits and clean concrete surfaces with abrasive blasting to avoid blocking of sewage flow through trough to interceptor.
B-47/ Reisner and Flora	Regulating W/BWG Chamber	Manhole Steps	Refurbish all M.H. steps in sump chamber. Thoroughly clean to remove rust and other contaminations. Apply corrosion resistant protective coating “46h-413 Hi-Build Tnemec-Tar” by Tnemec Co., Inc. or “Sikagard 62” by Sika Corporation or equal.

APPENDIX B – FLOW REGULATOR DEFICIENCIES

Structure I.D. No./ Location	Type Of Structure	Item	Proposed Remedies
		Brickwork Under M.H. Frames	Remove loose mortar form joints and clean brick surfaces. Grout epoxy cement if there is any cracked joint. Apply cement mortar to finish surface.
		Grating	Remove existing grating from both regulator and float chambers. Replace grating in regulator chamber with new corrosion resistant fibergrid "FRP (Fiberglass Reinforced Plastic) grating Type V" by Nemato Composites Inc. or "Duradek High Strength Grating" by MMFG Co. or equal. To access actuator, repair concrete spalls caused by removal of existing gratings and framework.
		Sludge Buildup	Thoroughly clear sludge and clean concrete surfaces using high-pressure detergent wash and with acid itch.
B-48/ Fort and Rouge River	Dam/ Weir	Manhole Cone	Remove loose mortar from joints and clean brick surfaces. If required grout epoxy cement "Seceder 32" or equal by Sika Corporation in mortar joints. Top coat with cement mortar to finish surface.
		Sludge Buildup	Thoroughly clear sludge, debris, sediment and roots to avoid block of flow in pipe.
B-52/ Babycreek (Miller Road)	Regulating W/BWG Chamber	Manhole Steps	Remove M.H. steps and provide new FRP ladder having anti-skid rungs and anchor the ladder to wall using manufacturer's connection details approved by engineer. Repair concrete spalls caused by removal of existing steps.
		Grating	Remove existing grating from both regulator and float chambers replace grating in regulator chamber with new corrosion resistant "FRP (Fiberglass Reinforced Plastic) grating Type V" by Nemato Composites Inc. or "Duradek High Strength Grating" by MMFG Co. or equal to access actuator.

APPENDIX B – FLOW REGULATOR DEFICIENCIES

Structure I.D. No./ Location	Type Of Structure	Item	Proposed Remedies
			Repair all concrete spalls caused by removal of existing grating.
		Sludge Buildup	Thoroughly clear sludge and clean concrete surfaces using high-pressure detergents wash and with acid itch.
		Regulating Chambers	Fill float chamber with lean concrete or flowable fills up to top of regulating chamber base slab.
		(Regulator, Float & Sump Chambers)	Provide 8" diameter pipe sleeve, completely grouted in the bottom of wall between float chamber and regulating chamber to avoid standing sewage water due to overflow in regulation chamber.
B-59/ Pulaski and West Jefferson	Regulating W/Diversion Chamber	Manhole Steps	Regulator and sump chambers: Remove existing steps from regulator chamber and provide new FRP ladders with anti-skid rungs.
			Repair all concrete spalls caused by removal of existing steps.
		Brickwork Under Manhole	Remove all brickwork under manhole frames and replace with concrete block masonry (Conforming to ASTM C-139) of proper height to bring M.H. covers to grade.
B-59/ Pulaski and West Jefferson	Regulating W/Diversion Chamber	Grating	Remove sludge covered heavily corroded grating from both regulator and float chambers an replace grating in the regulator chamber with new corrosion resistant fibergrid "FRP (Fiberglass Reinforced Plastic) grating Type V" by Nemato Composites Inc. or "Duradek high Strength grating" by MMFG Co. or equal.
			Locate grating to access actuator.
			Repair all concrete spalls caused by removal of existing grating and its framing.
		Sludge Buildup	Thoroughly clear sludge and clean concrete surfaces using high-pressure detergent wash and with acid itch.
		Regulating Chamber	Remove all loose and deteriorated concrete by mechanical means as approved by engineer.

APPENDIX B – FLOW REGULATOR DEFICIENCIES

Structure I.D. No./ Location	Type Of Structure	Item	Proposed Remedies
		s (Regulator, Float & Sump Chambers)	Where reinforcing steel with corrosion is encountered, to remove all contaminants and rust. Apply bonding bridge (Epoxy cement; Sika Armatec 110 or equal) between existing concrete and new repair mortar. Apply repair mortar Sikatop SF or equal). As per manufacturer recommendations. To avoid further deterioration of concrete from raw sewage and sulfide glasses apply "isoflex 611 coating" by Harrys-Peterson Company or "Heavy Duty Black High Build Coal-Tar Solution" By Tnemec Company, Inc. or equal. Fill float chamber with lean concrete or flowable fills up to top of regulating chamber base slab. Provide 8" diameter pipe sleeve, completely grouted in the bottom of wall between float chamber and regulating chamber to avoid standing sewage water due to overflow in regulation chamber.
B-59/ Pulaski and West Jefferson	Regulating W/Diversion Chamber	Diversion Chamber	Same as for regulating chambers.
B-95/ McDougall and Franklin	Regulating With Diversion Chamber	Brickwork Under M.H. Frame	Remove loose mortar and bricks. Grout Epoxy cement "Seceder 32" by Sika Corporation or equal in cracked joints. Apply cement mortar to finish surface.
		Grating	Remove existing grating and replace grating in regulator and sump chamber with new fibergrid "FRP (Fiberglass Reinforced Plastic) grating Type V' by Nemato Composites Inc. or "Duradek High Strength Grating" by MMFG Co. or equal. Locate Grating to access actuator. Repair concrete spalls caused by removal of grating and framework in both chambers.
		Sludge	Thoroughly clear sludge and clean

APPENDIX B – FLOW REGULATOR DEFICIENCIES

Structure I.D. No./ Location	Type Of Structure	Item	Proposed Remedies
		Buildup	concrete surfaces using high-pressure detergent wash and with acid itch.
		Regulating Chambers	Fill float chamber with lean concrete or flowable fills up to top of regulating chamber base slab.
		(Regulator, Float & Sump Chambers)	Provide 8" diameter pipe sleeve, completely grouted in the bottom of wall between float chamber and regulating chamber to avoid standing sewage water due to overflow in regulation chamber.
		Diversion Chamber	Thoroughly clean deteriorated surfaces. Apply repair mortar Sikatop SF by Sika Corporation or equal to finish surface. If required apply bonding coat "Sika Armatec 110" or equal between existing concrete surface and new repair mortar.
		Diversion Dam	Same as for diversion chamber.
A/ East Jefferson & McClellan	Flushing Gates, W/ Diversion Chamber	Manhole Steps	Remove existing M.H. steps and provide all regulating chambers with new FRP ladder having anti-skid rungs.
		Brickwork Under M.H. Frames	No repair is required. However, provide additional manhole over diversion chamber.
		Sludge Buildup	Clear sludge and clean concrete surfaces using high-pressure detergent wash and with acid itch.
D/ Livernois and Warren	Cross-Connection Control Chamber	Grating	Provide new corrosion resistant fibergrid "FRP (Fiberglass Reinforced Plastic) grating Type V" by Nemato Composites Inc. or "Duradek High Strength Grating" by MMFG Co. or equal.
		Sludge Buildup	Thoroughly clear sludge and clean concrete surfaces using high-pressure detergent wash and with acid itch.
E/ Livernois And Joy	Cross-Connection	Manhole steps	Remove debris and clean M.H. steps.

APPENDIX B – FLOW REGULATOR DEFICIENCIES

Structure I.D. No./ Location	Type Of Structure	Item	Proposed Remedies
	Control Chamber		
		Grating	Clear sludge and debris out of grating
		Sludge Buildup	Thoroughly clear sludge and clean concrete surfaces, M.H. steps, gratings and gate using high-pressure detergent wash and acid itch.
B-54 / Warren and Rouge River	BWG Chamber / Diversion Dam	Frames and Covers	There is no direct access opening available on U/S side of BW gates. The openings available are only on D/S side of gates. BWG chamber on D/S are filled with river water and gates remain closed under the pressure of water. The opening available on U/S side of gates is over 1,000 ft away from chamber. Safety is concerned in walking such a long distance in the interceptor. To inspect the chamber, direct access on U/S side of gates is necessary from safety consideration. Therefore, additional M.H. with steps and standard M.H. frame and cover is recommended.
B-56, B-57 & B-58 / Tireman	Diversion Chamber	Manhole Steps	Install new FRP ladder with anti-skid rungs in diversion chamber.
B-60, B-61 & B-62 / Chicago (East)	Diversion Chamber	Frames and Covers	No access manhole over diversion chambers. Provide new access manhole.
		Grating	Direct access openings are required to inspect these structures.
B-63 / Rouge Park Dr., West of Rouge River & South of Plymouth	Diversion Chamber	Frames and Covers	Remove loose mortar and bricks around and under the M.H. frame. Grout epoxy cement “Seceder 32 Hi-Mod” by Sika Corporation or equal in cracked joints. Apply repair cement mortar to hold the frame in place.
B-63 / Rouge Park Dr., West of Rouge River &	Diversion Chamber	Sludge Buildup	Thoroughly clear sludge and roots from the chamber.

APPENDIX B – FLOW REGULATOR DEFICIENCIES

Structure I.D. No./ Location	Type Of Structure	Item	Proposed Remedies
South of Plymouth			
			Thoroughly clear sludge and clean concrete surfaces using high-pressure detergent wash and with acid itch.
			Dilute sludge to flow-able consistency to dispose of in sewer.
B-64 / Plymouth FD., West of Rouge River	Diversion Chamber	Manhole Steps	Refurbish M.H. Steps.
			After removing rust and other contaminations completely apply corrosion resistant protective coating “46H-413 Hi-Build Tneme-Tar” by Tnemec Company Inc. or “Sikagard 62” by Sika Corporation or equal.
		Manhole Cone	Remove mortar and brickwork around and under the frame.
			Provide new concrete block masonry (conforming to ASTM C-139) of proper height to bring M.H. cover to grade. Secure M.H. frame to concrete blocks with cement mortar.
		Sludge Buildup	Thoroughly clear sludge preventing flow through trough.
		Diversion Chamber	Remove Roots from the chamber.
			If any structural damage has occurred report to engineer for further action.
B-65 / Fullerton and Burt	Diversion Chamber	Frame and Cover	Provide new precast concrete manhole with frame and cover for direct access to structure.
			Install FRP ladder anchored to wall.
B-67, B-68 / Lahser and Rouge River	Diversion Chamber	Frame and Cover	Provide new precast concrete manhole with frame and cover for direct access to structure.
			Install FRP ladder anchored to wall.
			Restore existing brickwork in the present access M.H. grout epoxy cement in the cracked joints and top coat brick surfaces with cement mortar to finish surface.
B-69 / Jeffries Freeway and Rouge River	Diversion Chamber	Manhole Steps	Remove existing M.H. steps and replace with new FRP ladder having anti skid rungs.
			Repair concrete spalls caused by removal of existing steps.

APPENDIX B – FLOW REGULATOR DEFICIENCIES

Structure I.D. No./ Location	Type Of Structure	Item	Proposed Remedies
		Manhole Cone	Restore deteriorating brickwork under frame. Remove loose mortar from joints. Grout epoxy cement "Seceder 32" by sika corporation or equal in mortar joints. Apply cement mortar to finish surface.
		Sludge Buildup	Grease buildup in siphon needs to be clear to avoid backing up of water.
B-70 / Jeffries Freeway and Rouge River	Diversion Chamber	Sludge Buildup	Thoroughly clear grease from trough and all along lower portion of chamber walls up to spring line of pipe using high-pressure detergent wash and with acid itch if required. Dilute sludge to flowable consistency to dispose of in sewer.
B-71 / Ray Avenue and Brammel	Sanitary ledge in Manhole	Manhole Steps	Remove existing M.H. steps and replace with new "FRP (Fiberglass reinforced plastic) PS1 M.H. step" by M.A. IND. Or equal. Alternatively provide new FRP ladder anchored to wall.
		Manhole Cone	Restore deteriorating brickwork under frame. Remove loose mortar and bricks if there is any. Grout epoxy cement "Seceder 32 Hi – Mod" by Sika Corporation or equal in cracked joints. Apply cement mortar to finish surface.
B-72 / Lyndon Avenue and Brammel	Diversion Chamber W/BWG	Manhole Steps	Install FRP ladder below existing manhole steps.
B-72 / Lyndon Avenue and Brammel	Diversion Chamber W/BWG	Manhole Cone	Chip off rough concrete surface and apply cement mortar to finish surface. Apply bonding bridge "Sika Armatec 110" by Sika corporation or equal between existing concrete and new cement mortar.
		Sludge Buildup	General cleaning of structure is recommended.

APPENDIX B – FLOW REGULATOR DEFICIENCIES

Structure I.D. No./ Location	Type Of Structure	Item	Proposed Remedies
B-75 / Fenkell and Rouge River	Sanitary Ledge	Manhole Steps	Refurbish M.H. steps removing rust and other contaminations. Apply corrosion resistant protective coating, “46H-413 Hi- Build Tneme-tar” by Tnemec company, Inc. or “Sikagard 62” by Sika corporation or equal.
		Manhole Cone	Remove deteriorating brickwork under frame and replace with concrete block masonry (conforming to ASTM C-139) of proper height to take care of settling pavement around and to bring M.H. cover up to pavement level. Chip off rough concrete surface and apply cement mortar to finish surface. Apply bonding bridge “Sika Armatec 110” by Sika corporation or equal between existing concrete and new cement mortar.
		Sludge Buildup	General cleaning of structure is recommended.
B-75 / Fenkell and Rouge River	Sanitary Ledge	Manhole Steps	Refurbish M.H. steps removing rust and other contaminations. Apply corrosion resistant protective coating, “46H-413 Hi- Build Tneme-tar” by Tnemec company, Inc. or “Sikagard 62” by Sika corporation or equal.
B-75 / Fenkell and Rouge River	Sanitary Ledge	Manhole Cone	Remove deteriorating brickwork under frame and replace with concrete block masonry (conforming to ASTM C-139) of proper height to take care of settling pavement around and to bring M.H. cover up to pavement level.
		Sludge Buildup	Flush sludge buildup and clean concrete surfaces.
		Miscellaneous	Grout epoxy cement “Seceder 32” in cracked joints. Repoint brick joints with cement mortar.
B-76 / West Puritan Avenue and Rouge River	BWG Chamber	Brickwork under M.H.	Remove deteriorating brickwork under frame and replace with concrete block masonry (conforming to ASTM C-139)

APPENDIX B – FLOW REGULATOR DEFICIENCIES

Structure I.D. No./ Location	Type Of Structure	Item	Proposed Remedies
		Frame	of proper height to bring M.H. cover to pavement level.
B-77 / Puritan Avenue and Riverdale	Diversion Chamber W/BWGS	Manhole Steps	Install new reinforced plastic “PS1 M.H. Step” by M.A. Industries, Inc. or equal or new FRP ladder down to the bottom of chamber.
		Diversion Chamber	No structural repair is needed. However, remove deteriorated metal liner in the air vent and replaced with new liner duly coated with corrosion resistant coating. Grout epoxy cement around annular space between liner and concrete hole.
B-79 / Florence and Ridge	Special Manhole	Manhole Cone	Remove loose mortar out of the joints. Grout epoxy cement “ Seceder 32” by sika corporation or equal in cracked joints. Apply cement mortar to finish surface.
		Sludge Buildup	General flushing of structure is recommended.
B-75 / Fenkell and Rouge River	Sanitary Ledge	Manhole Cone	Remove deteriorating brickwork under frame and replace with concrete block masonry (conforming to ASTM C-139) of proper height to take care of settling pavement around and to bring M.H. cover up to pavement level.
		Sludge Buildup	Flush sludge buildup and clean concrete surfaces.
		Miscellaneous	Grout epoxy cement “Seceder 32” in cracked joints. Repoint brick joints with cement mortar.
B-76 / West Puritan Avenue and Rouge River	BWG Chamber	Brickwork under M.H. Frame	Remove deteriorating brickwork under frame and replace with concrete block masonry (conforming to ASTM C-139) of proper height to bring M.H. cover to pavement level.
B-77 / Puritan Avenue and Riverdale	Diversion Chamber	Manhole Steps	Install new reinforced plastic “PS1 M.H. Step” by M.A. Industries, Inc. or

APPENDIX B – FLOW REGULATOR DEFICIENCIES

Structure I.D. No./ Location	Type Of Structure	Item	Proposed Remedies
	W/BWGS		equal or new FRP ladder down to the bottom of chamber.
		Diversion Chamber	No structural repair is needed. However, remove deteriorated metal liner in the air vent and replaced with new liner duly coated with corrosion resistant coating. Grout epoxy cement around annular space between liner and concrete hole.
B-79 / Florence and Ridge	Special Manhole	Manhole Cone	Remove loose mortar out of the joints. Grout epoxy cement " Seceder 32" by sika corporation or equal in cracked joints. Apply cement mortar to finish surface.
		Sludge Buildup	General flushing of structure is recommended.
B-80 / Six Mile and Rouge River	Diversion Chamber W/BWGS	Sludge Buildup	Thoroughly clear sludge and clean concrete surfaces using high-pressure detergent wash and with acid itch.
B-81 / Six Mile and Rouge River	Diversion Chamber W/BWGS	Manhole Steps	Remove M.H. steps and replace with new reinforced plastic "PS1 M.H. Steps" by M.A. Ind., Inc. or equal or install new FRP ladder anchored to wall.
		Brickwork under M.H. frame	Restore brickwork under frame. Blast clean to remove loose mortar out of joints. Grout epoxy cement "Seceder 32" in brick joints and apply cement mortar to finish surface.
B-82 / Glenhurst	Diversion Chamber W/BWG	Manhole Steps	Remove existing M.H. Steps. Install new FRP ladder with anti-skid rungs down to the bottom of chamber. Repair concrete spalls caused by removal of existing steps.
		Brickwork under M.H. Frame	Remove brick courses under frame and replace with concrete block masonry (conforming to ASTM C-139) of proper height to bring M.H. covers to pavement level.

APPENDIX B – FLOW REGULATOR DEFICIENCIES

Structure I.D. No./ Location	Type Of Structure	Item	Proposed Remedies
B-83 / Shiawassee and Seven Mile Road	Diversion Chamber W/BWGS	Manhole Steps	Remove existing M.H. steps and replace with new FRP ladder. Alternatively, install new reinforced plastic “PS 1 M.H. steps” by M.A. Industries, Inc or equal.
		Manhole Cone	Clean mortar joint by air blasting to remove loose mortar. If required, grout epoxy cement “Seceder 32” by Sika corporation in joints. Apply cement mortar to finish surface.
		Sludge Buildup	Scrap all mineral deposit from top of dam and clean concrete surfaces.
B-83 / Shiawassee and Seven Mile Road	Diversion Chamber W/BWGS	Diversion Chamber	Scrap dripping mineral deposits from all over the ceiling by mechanical means. Sand blast ceiling to remove deposits out of brick joints. To stop future dripping of mineral deposits grout epoxy cement “Seceder 32” by Sika corporation or equal, apply repair mortar Sikatop SF as per manufacturer recommendations. Finally apply sealing coat of “Isoflex 611 coating” by Harrys-Peterson company or equal.
B-85 / Berg and Seven Mile Road East	Outfall Structure W/BWG Chamber	Frames and Covers	Install new precast concrete M.H. with standard frame and cover over diversion chamber for direct and easy access to chamber. Provide M.H. with new FRP ladder or reinforced plastic “PS 1 M.H. Steps” by M.A. Industries, Inc. or equal down to the bottom of chamber.
B-85 / Berg and Seven Mile Road East	Outfall Structure W/BWG Chamber	Outlet structure with BWG Chamber	Outlet Structure: Remove all loose and deteriorated concrete and brickwork from walls and ceiling by mechanical means. Air blast to remove loose mortar out of brick joints. Grout epoxy cement “Seceder 32” in

APPENDIX B – FLOW REGULATOR DEFICIENCIES

Structure I.D. No./ Location	Type Of Structure	Item	Proposed Remedies
			cracks if there is any. Apply bonding bridge " Sika Armatec 110" by Sika corporation or equal. Apply repair mortar Sikatop SF or equal to finish surface.
B-86 / West Frisbee and Shiawassee	Diversion Chamber W/BWG	Frame and Cover	Install new precast concrete M.H. with standard frame and cover over diversion chamber for direct access to dam. Provide M.H. with new FRP ladder or reinforced plastic "PS1 M.H. Steps" by M.A. Industries, Inc or equal down the bottom of chamber.
B-87 / Pembroke (Frisbee) and Berg	Diversion Chamber W/DAM	Frames and Covers	Install new precast concrete manhole with standard frame and cover over diversion chamber for direct access to chamber.
B-87 / Pembroke (Frisbee) and Berg	Diversion Chamber W/DAM	Frames and Covers	Install new precast concrete manhole with standard frame and cover over diversion chamber for direct access to chamber. Provide M.H. with new FRP ladder or reinforced plastic "PS1 M.H. steps" by M.A. Industries, Inc. or equal down to the bottom of chamber.
OAKWOOD DISTRICT			
B-50 / Fort and Rouge River	Outfall and Overflow Structure	Manhole Steps	Remove existing M.H. steps and replace with new FRP ladder having anti skid rungs.
		Manhole Cone	Remove loose mortar from brick joints and clean brick surfacing by sand blasting. Grout epoxy cement in joints if required. Apply cement mortar to finish surface.
		Grating	Remove existing grating and replace with corrosion resistant fibergrid "FRP Grating Type V" by Nemato composites Inc. or "Duradek high strength grating" by MMFG Co. or equal.
CITY OF DEARBORN			
B-53 / Hubbell and Southfield	Regulating with Diversion Chamber	Manhole Steps	Remove existing M.H. steps from Diversion Chamber and replace with new FRP ladder having anti-skid rungs.

APPENDIX B – FLOW REGULATOR DEFICIENCIES

Structure I.D. No./ Location	Type Of Structure	Item	Proposed Remedies
			Anchor new ladder to existing wall using manufacturer's connection details, approved by engineer.
			Refurbish manhole steps in regulator and sump chambers. Remove rust and clean corrode surface.
			Apply corrosion resistant protective coating "46H-413 Hi-Build Tneme-Tar" by Tnemec Company inc. or "Sikagard 62" by Sika Corporation or equal.
			Repair all concrete spalls caused by removal of existing steps.
		Grating	Remove existing grating from all the chambers.
			Replace Grating in regulator and sump chambers with new corrosion resistant fibergrid "FRP (Fiberglass Reinforced Plastic) grating Type V" by Nemato Composites Inc. or "Duradek high strength grating" by MMFG Co. or equal.
			Locate platform to access new actuator.
			Repair All concrete spall caused by removal of existing gratings and framework.
		Sludge Buildup	Thoroughly clear sludge and clean concrete surfaces using high-pressure detergent wash and with acid itch.
		Regulating Chambers (Regulator, Float & Sump Chambers)	Fill float chamber with lean concrete or flowable fill up to top of regulating chamber base slab.
			Provide 8" diameter pipe sleeve, completely grouted in the bottom of wall between float chamber and regulating chamber to avoid standing sewage water due to overflow in regulation chamber.

Appendix B - References

1. City of Detroit
   DWSD – CS – 1158
   Long Term CSO Plan for the Detroit and Rouge Rivers July 1, 1996.

Volume 1	10.06		Collection System Rehabilitation
Volume 2	10.06A		Collection System Rehabilitation
Volume 3	10.06A		Collection System Rehabilitation- Appendix D and Inspection Reports
Volume 4	10.02	E1	Inflatable Dams
	10.02	E2	Identify Sludge Build-Up
	10.02	E3	Identify Conditions of System
	10.02	E6	Identify Planned Improvements

2. DWSD Design Basis Report Wastewater Collection System Tasks 2 and 3 - CS-1158 Regulator and Related Components Rehabilitation, September 1993.

3. DWSD Contract PC-695 Contract Documents for Regulators / Remote Flow Control Structures and Dam Rehabilitation, Book 2 of 2, January 1998.

4. DWSD Contract PC-698 Contract Documents for In-System Storage, Book 2 of 2, March 1996.

5. DWSD Contract CS-1329 In-System Storage Design.

6. DWSD PC-744 Asset Audit Report, December 19, 2001.

7. DWSD Operational Plan, October 1994.

8. DWSD CS-1281 Assistance with Phase III – CSO Program, Department-Wide Instrumentation, Control and Computer System Program II, Wastewater Collection System Operational Elements Data, Existing and Currently Planned and Recommended, March 15, 2001.

9. DWSD PC-665 System-Wide Instrumentation and Control, Westin Engineering, Inc., Wastewater Collection System, Valve Remotes, March 1993.

10. DWSD Wastewater Collection System Operation and Maintenance Manual, Volume 1 and 2, September 1988.

11. Detroit Regulator Inspection, Contract CS-1158, Water Control Systems Limited, October 1992.

12. CS-1053 DWSD Sewer Outfall Inspection Report, Task Order No. 1. October 1988.

13. GDRSS Model, Technical Memorandum No. 41, CDM.

14. CS-1281 Assistance with Phase III – Combined Sewer Overflow Program, Real Time Control Work Group.