Ovonic Regenerative Fuel Cell™ Prototypes

OVONIC 40-OV-60 FUEL CELL STACK

Configuration:	40	cells in series
Electrode Surface Area:	60	cm^2
Module Dimensions:		
Width	11.8	cm
Length	26.2	cm
Height	13.5	cm
Volume	4.2	L
Module Weight:	3.9	kg
Nominal Performance:		
Power	260	W
Voltage	26	V
Current	10	A
Specific Power	67	W/kg
Power Density	62	W/L
Temperature	60	°C

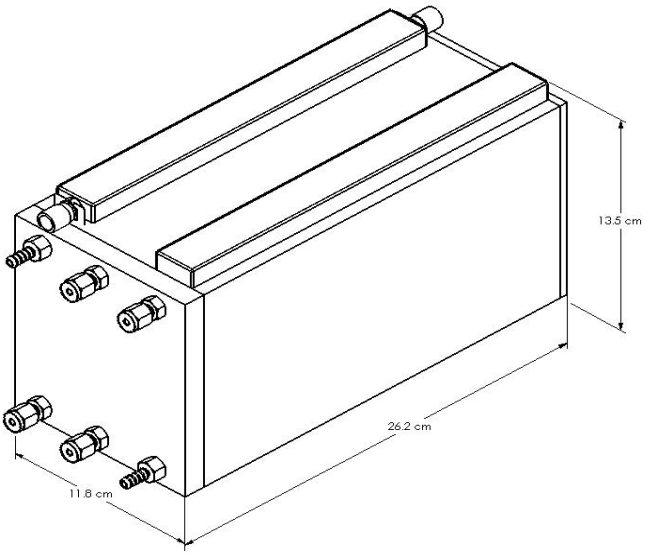

OVONIC FUEL CELL COMPANY LLC

2983 Waterview Drive
Rochester Hills, MI 48309

Phone: 248.293.0440
Fax: 248.299.4228
Website: www.ovonicfuelcell.com
E-mail: fuelcell@ovonic.com

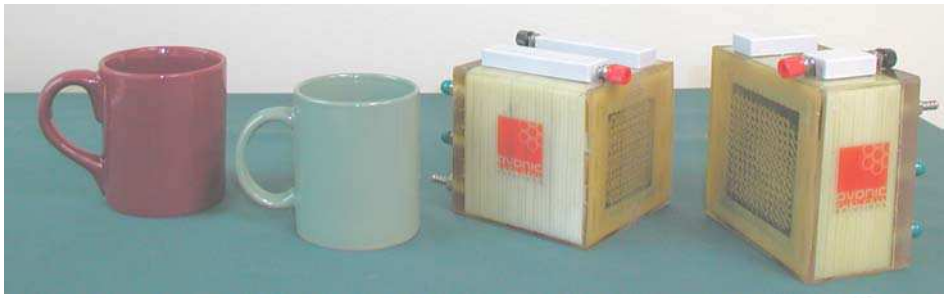

ovonics@work™