Results of a phase I trial evaluating a liver support device utilizing albumin dialysis

Samir S. Awad, MD, Fresca Swaniker, MD, John Magee, MD, Jeffrey Punch, MD, *and* **Robert H. Bartlett, MD,** *Ann Arbor, Mich, and Houston, Tex*

Background. *We have previously reported the clearance of protein-bound and water-soluble hepatic toxins, in vitro and in an animal model, using albumin dialysis as an extracorporeal hepatic support (ECHS) device.*

Objective. *The objective of this study was to evaluate albumin dialysis through a phase I clinical trial. We hypothesized that albumin dialysis would (1) decrease elevated levels of hepatic toxins, (2) increase the Fischer ratio, and (3) decrease hepatic encephalopathy (HES) and intracranial pressure (ICP), while (4) maintaining stable hemodynamics.*

Methods. *Patients with acute liver failure were treated with an ECHS device utilizing continuous hemodiafiltration with continuous albumin dialysis. Mean arterial blood pressure (MAP), heart rate (HR), systemic venous oxygen saturation (SvO_2), ICP, and HES were recorded. Blood samples were evaluated for hepatic toxins and factor VII levels.*

Results. *Nine patients were enrolled (status I, n = 5; status IIA, n = 4). There was no significant change in MAP, HR, or SvO_2 (MAP: Pre = 81 ± 5.6 mm Hg, Post = 79 ± 5.9 mm Hg,* P *= .70; HR: Pre = 104 ± 5.2 bpm, Post = 107 ± 6.2 bpm,* P *= .62; SvO_2: Pre = 72 ± 3.5, Post = 71 ± 1.7,* P *= .77). There was a decrease in the ammonia and total bilirubin levels (NH_3: Pre = 129.8 ± 23.8 mg/dL, Post = 63.9 ± 16.1 mg/dL,* P *= .01; total bilirubin: Pre = 20.3 ± 2.5 mg/dL, Post = 17.6 ± 2.7 mg/dL,* P *= .4). There was a significant increase of the Fischer ratio and factor VII levels (Fischer ratio: Pre = 0.98 ± 0.2, Post = 2.17 ± 0.5,* P *= .038; factor VII: Pre = 13.9 ± 4.9, Post = 23.2 ± 4.8,* P *= .015). There was a significant decrease in the HES and ICP (HES: Pre = 3.8 ± 0.1, Post = 2 ± 0.7,* P *= .02; ICP: Pre = 37 ± 3.9, Post = 13.3 ± 2.8,* P *= .048). Of 5 status I patients, 1 recovered native hepatic function and 3 were bridged to transplantation.*

Conclusions. *This phase I study suggests that albumin dialysis as a liver support device is safe and effective in clearing hepatic toxins, with an associated decrease in the HES and ICP. This encouraging efficacy data warrant further investigation with a phase II/III trial. (Surgery 2001;130:354-62.)*

From the Department of Surgery, Divisions of Surgical Critical Care and Transplantation, University of Michigan Hospitals, Ann Arbor, and the Michael E. DeBakey Department of Surgery, Baylor College of Medicine, Houston

DESPITE SIGNIFICANT ADVANCEMENTS that have been made in the field of critical care, patients with acute liver failure (ALF) continue to have an unacceptably high mortality.[1] The only proven effective treatment for patients with ALF is orthotopic liver transplantation.[2] Without transplantation, approximately 80% of these patients will die, often while waiting on a transplant list.[1] This severe worldwide shortage of donor organs has mandated the development of a liver assist device that can temporarily support the patient until the native liver recovers or that can serve as a bridge to orthotopic liver transplantation.

Even though the pathophysiology is incompletely understood, it is recognized that in ALF massive dysfunction of hepatocytes results in loss of the synthetic, metabolic, and detoxification pathways of the liver. Failure of the detoxification functions of the liver leads to the accumulation of multiple water-soluble toxins, such as ammonia, phenols, and mercaptans and protein-bound hepatic toxins, such as aromatic amino acids, free fatty acids, endogenous benzodiazepines, and false neurotransmitters.[3] These toxins accumulate in the plasma because the diseased liver no longer is able to perform key metabolic functions. All these

Supported in part by NIH RO1 Grant 15434.

Presented at the 62nd Annual Meeting of the Society of University Surgeons, Chicago, Ill, February 8-10, 2001.

Reprint requests: Samir S. Awad, MD, Baylor College of Medicine, Houston VAMC–Surgical Service (112), 2002 Holcombe Blvd, Houston, TX 77030.

Copyright © 2001 by Mosby, Inc.

0039-6060/2001/$35.00 + 0 **11/6/116671**

doi:10.1067/msy.2001.116671

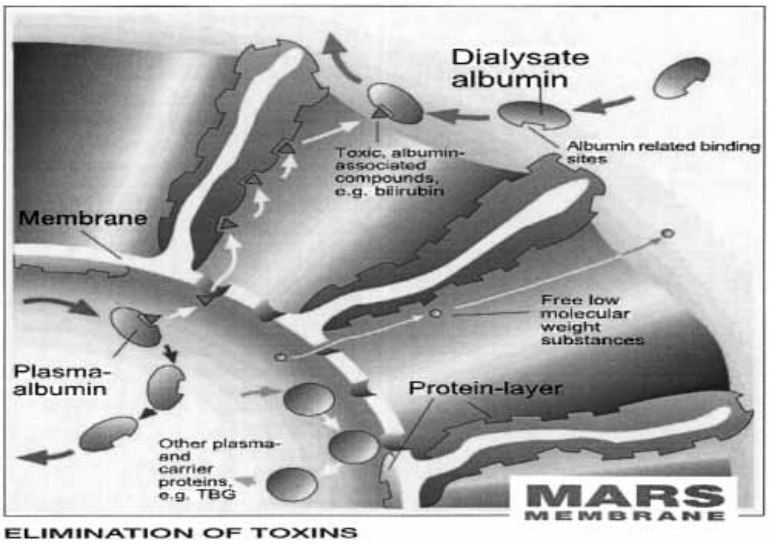

Fig 1. Mechanism of transport of water-soluble and protein-bound toxins across selective hemofilter. During the priming process, albumin molecules interdigitate and bind to the hemofilter fiber pores, forming a protein layer. The albumin molecules with free binding sites act as carrier proteins, transporting toxins bound to proteins *(triangles)* from the blood side across the hemofilter to the albumin-rich dialysate. Water-soluble molecules *(small circles)* are easily transported according to their concentration gradient. Because of the selective nature of the hemofilter, toxins with molecular weights greater than 60 kd *(large disks)* cannot cross the hemofilter. (Courtesy of Stange et al.[25] Reproduced with permission from Teraklin, Hamburg, Germany.)

toxins, specifically the protein-bound hepatic toxins, have been implicated in causing hepatic encephalopathy, cerebral edema, coma, pulmonary edema, renal failure, and cardiovascular collapse, often leading to progressive multi-organ failure and death.[2-4]

Multiple approaches of varying complexity that have been developed to temporarily support the liver in ALF have used cell-based and non–cell-based techniques.[2,3,5] Cell-based techniques have included the perfusion of plasma or whole blood through whole intact human or animal livers,[6,7] the perfusion of plasma through cartridges loaded with porcine cells (bioartificial liver [BAL]),[8] and the perfusion of whole blood through cartridges loaded with hepatoblastoma cells (extracorporeal liver assist device [ELAD]).[9,10] Treatment with whole organ perfusion is complex and can be logistically difficult. Treatment with the BAL was well tolerated, with reports of uncontrolled studies demonstrating successful bridging to transplantation, a decrease in intracranial pressure, and a modest reduction of ammonia and aromatic amino acids, but no metabolic benefits.[2,3] Phase II/III trials are currently underway. Similarly, uncontrolled trials with ELAD have demonstrated successful bridging to transplantation, but there were no survival or metabolic benefits demonstrated in a pilot-controlled trial.[2,3]

Non–cell-based techniques have included hemodialysis,[11] hemofiltration,[12] plasma exchange,[13] charcoal hemoperfusion,[14] and hemodiabsorption.[15] Each of these methods has had limitations—for example, a lack of selectivity, with the removal of beneficial nontoxic proteins, such as hepatic growth factors and various hormones[16]; an inability to remove protein-bound hepatic toxins[12]; bleeding complications[14]; the initiation of systemic inflammatory response syndrome[17]; and a limited ability to transport toxins in the middle molecular-weight range.[3]

We have been studying a new method of non–cell-based extracorporeal hepatic support (ECHS) device that utilizes selective hemodiafiltration with countercurrent albumin dialysis aimed at selectively removing both water-soluble and protein-bound hepatic toxins in the low and middle molecular-weight range (<60 Kd). This ECHS device is based on the concept of albumin dialysis, initially described by Stange and Mitzner et al[18,19] and named the Molecular Adsorbent Recycling System (MARS; Teraklin, Rostock, Germany). Albumin dialysis involves the extracorporeal circulation of blood through an albumin-loaded hemofilter (molecular weight cutoff, 60 Kd) with simultaneous continuous countercurrent dialysis with an albumin (molecular weight, 65 Kd) solution. The albumin dialysate solution acts as a sink

Table I. Patient demographic, etiology of acute liver failure, duration of treatment with ECHS, and initial and final outcomes

Patient	*Age*	*Diagnosis*	*UNOS status*	*Duration of ECHS*
1	48	Chronic rejection s/p OLT	IIA → VII	96
2	26	Autoimmune hepatitis	IIA → VII	108
3	44	Acetaminophen toxicity	I	36
4	45	Hemochromatosis	IIA → VII	132
5	42	Alcoholic hepatitis	IIA → VII	56
6	62	Active hepatitis B	I	72
7	13	Autoimmune hepatitis	I	80
8	46	Hepatitis C — primary nonfunction	I	12
9	20	Budd-Chiari syndrome	I	67

UNOS, United Network for Organ Sharing; ECHS, Extracorporeal hepatic support; OLT, orthotopic liver transplant; HES, hepatic encephalopathy score; HRS, hepatorenal syndrome; PV, portal vein; ICP, intracranial pressure; MOD, multi-organ dysfunction; HA, hepatic artery.

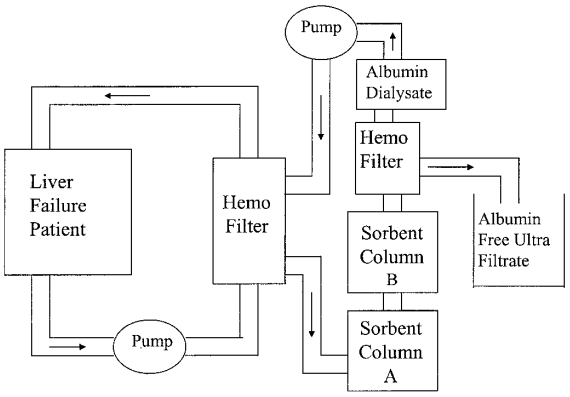

Fig 2. Schematic of ECHS circuit. Extracorporeal liver support device. The device consists of 2 circuits: a hemofiltration circuit and a plasma-processing circuit. During treatment, blood flows from the patient through a conventional dialysis hemofilter, which has been preprimed with a 10% human albumin solution, and back to the patient. Simultaneously, albumin dialysis is initiated in a countercurrent direction, through the dialysis compartment of the hemofilter, through 2 charcoal sorbent columns and back to filter. Flow rates in both circuits are matched during treatment. (Heat exchanger in hemofiltration circuit is not shown in diagram.)

and facilitates the extraction of water-soluble and protein-bound water-insoluble toxins described above as the possible pathogens of hepatic encephalopathy and cerebral edema, while beneficial molecules with molecular weights greater than 60 Kd remain in the blood and cannot cross this membrane (Fig 1). The albumin dialysate with bound toxins then flows through sorbent columns, such as activated charcoal and anion exchangers, which can adsorb the albumin-bound hepatic toxins, regenerating albumin molecules with free-binding sites, which then recirculate to bind more hepatic toxins.

We have previously reported hemofiltration with albumin dialysis to be effective in the in vitro clearance of representative protein-bound and water-soluble hepatic failure toxins, such as ammonia, aromatic amino acids, free fatty acids, unconjugated bilirubin, and the inflammatory cytokines tumor necrosis factor alpha (TNF-α) and interleukin 6 (IL-6).[20-22] Furthermore, we have reported the safety and efficacy of albumin dialysis in a large animal model of hepatic failure.[23] Based on these encouraging preliminary results, our primary objective was to evaluate the safety of this ECHS device, which utilizes albumin dialysis through a phase I clinical trial. Our secondary intent was to determine whether albumin dialysis is effective in the clearance of hepatic toxins described above as the cause of hepatic encephalopathy and cerebral edema. We therefore hypothesized that in patients with ALF continuous veno-venous hemodiafiltration with continuous albumin dialysis would do the following: (1) decrease elevated levels of hepatic toxins, such as ammonia and total bilirubin, (2) increase the ratio of branched chain (Leucine + Isoleucine + Valine) to aromatic amino acids (Phenylalanine + Tyrosine), also known as the Fischer ratio, and (3) reverse hepatic encephalopathy, while (4) maintaining stable hemodynamics.

METHODS

Patient selection. This was a phase I non-controlled trial performed between 1998 and 2000 involving 1 center. With Food and Drug Administration (FDA) and internal review board approval, we studied patients with ALF, who were

Initial outcome	*Final outcome*
Improved HES; reversal of HRS	Death resulting from bleeding from chronic subdural
Complete neurological recovery; taken off ECHS	Death 2 weeks after recovery as result of thrombosed PV
Initial decrease in ICP	Death from cerebral edema
No improvement	Death caused by fungal sepsis
Improved HES	Death resulting from MOD and sepsis
Decreased ICP, with bridge to OLT	Death in OR following reperfusion of OLT
Complete native hepatic recovery	Alive and well
Bridged to OLT	Alive and well
Bridged while anhepatic to 2nd OLT after	Death 2 weeks post 2nd OLT from mesenteric ischemia

designated by the hepatology and liver transplant teams to be candidates for emergent liver transplantation. Inclusion criteria included the following: acute fulminant hepatic failure, United Network for Organ Sharing (UNOS) status I, acute on chronic hepatic failure, UNOS status IIA or UNOS status VII, patients who were initially designated UNOS VII or IIA but who were temporarily placed on hold (eg, active infection, requirement for high-dose pressors, or reversible multi-organ failure). Exclusion criteria included the following: (1) pregnancy, (2) ongoing bleeding necessitating transfusion (>4 units/d), (3) metastatic or incurable malignant disease, (4) known HIV-positive status, and (5) immunosupression from primary disease (ie, bone marrow transplant, chemotherapy). Neonates were also excluded. All patients selected had a good prognosis for a healthy life if liver transplantation was successful.

This selection criteria was based on the University of Michigan experience with patients who were listed status I and IIA for liver transplantation between the years of 1993 and 1995.[24] Over this period, for the 47 patients who were listed status I, only 13 donor organs became available for liver transplantation; the remaining 34 of the 47 patients (72%) died while awaiting a transplant. The mortality for the status IIA patients or those patients who were IIA and temporarily became ineligible for transplantation was 100%.

Experimental protocol. Before patients were enrolled into this study and during support, all aspects of patient management (eg, nutrition, fluid balance, ventilation management, management of encephalopathy, cerebral edema, renal failure, and sepsis) followed state-of-the-art surgical intensive care protocols currently considered standard of practice for critically ill patients with ALF. This included arterial pulse oximetry (Sa_{O_2}), mean arterial blood pressure (MAP) by indwelling arterial catheter, central venous pressure, pulmonary artery pressure monitoring, and venous saturation monitoring (Sv_{O_2}), when indicated. Patients with signs of intracranial hypertension had intracranial pressure monitoring. Mental status was assessed by means of the hepatic encephalopathy score (HES).[5]

ECHS device. The concept of albumin dialysis for the selective removal of hepatic toxins, originally described by Stange and Mitzner et al,[18,19] was tested with the use of a combination of commercially available FDA-approved components, which were used for off-label indications. The ECHS device consisted of 2 circuits running in countercurrent directions (Fig 2). The hemofiltration circuit consisted of a roller pump (Cobe Laboratories, Atlanta, Ga), a heat exchanger (Ecmotherm-II; Avecor, Plymouth, Minn), and a hemofilter, with a molecular weight cutoff of 60 Kd (MW < albumin) (Renaflo II HF 700; Minntech, Minneapolis, Minn). Before the start of treatment, this hemofilter was pre-primed for 1 hour with a 10% human albumin solution (Baxter, Glendale, Calif) on both the blood and dialysate sides. The dialysis circuit consisted of a roller pump (Cobe Laboratories) and 2 cellulose-coated activated charcoal sorbent columns (Absorba 300; Cobe Laboratories). In the case of renal failure, a second smaller hemofilter (Renaflo II HF 400; Minntech) was used in the dialysis circuit to perform continuous hemofiltration with or without dialysis (CVVH ± D).

Conduct of extracorporeal hepatic support. After informed consent was obtained from the family, each patient had an 18F double-lumen central venous catheter (OriGen Biomedical, Austin, Tex)

inserted through a percutaneous technique and was started on ECHS utilizing continuous venovenous hemodiafiltration (blood flow rate = 10 mL/kg/min) with continuous countercurrent albumin dialysis using a 10% human albumin solution flowing through 2 activated charcoal sorbent cartridges (dialysate flow rate = 10 mL/kg/min) (Fig 2). The activated charcoal sorbent cartridge has the capacity to adsorb the above-mentioned toxins bound to albumin in the dialysate, thereby regenerating albumin molecules with free binding sites, which were recirculated to facilitate the extraction of further accumulated toxins. Because the binding capacity of the sorbent cartridges was not known, new charcoal cartridges were replaced in the dialysis circuit every 24 hours. The hemofilter was changed according to normal continuous hemofiltration standards. The albumin concentration in the dialysate solution was measured and maintained at 10 g/dL, previously shown to be the optimal concentration for the extraction of protein-bound toxins.[20] Clotting in the hemofilter circuit was prevented by maintenance of whole-blood activated clotting time (ACT) at 140 ± 10 seconds, measured hourly (normal ACT = 110 ± 10 seconds). If necessary, a dilute solution of heparin at 100 units/hr was infused continuously into the extracorporeal circuit to maintain this level of anticoagulation.

The MAP, heart rate, central hemodynamic parameters (central venous pressure, capillary wedge pressure, cardiac output, and Svo_2), and urine output were continuously monitored for each patient to determine the primary outcome measure of this phase I trail, the safety of ECHS. Any bleeding complications related to ECHS or mechanical failures were carefully sought and recorded. The secondary outcome measures of this trial, the efficacy of ECHS in the removal of hepatic toxins and the effect on hepatic encephalopathy and cerebral edema, were then assessed. Serial blood samples were collected and evaluated for total bilirubin, ammonia, aromatic and branched chain amino acids, and factor VII levels. Additionally, liver function tests, coagulation tests, fibrinogen, complete blood cell count with platelets, serum electrolytes, blood urea nitrogen, and creatinine were evaluated at regular intervals during treatment. The hematocrit was maintained at 30% via transfusion of packed red blood cells. The platelet count was maintained at greater than $50{,}000/mm^3$ through the transfusion of platelets. Any rise in the prothrombin time (international normalized ratio [INR]) was treated with fresh frozen plasma as needed. Neurologic monitoring and assessment consisting of hourly clinical examination, determination of the HES, and continuous monitoring of ICP in patients with cerebral edema were recorded at baseline and throughout treatment.

Endpoints. Treatment with ECHS was continued until the patient reached a "stable improved condition" (defined below), a donor liver became available for transplantation, the patient was no longer deemed a transplant candidate and did not improve after 5 days of treatment, or if a malfunction of the circuit or if unforeseen complications occurred.

Improved clinical status. A *stable improved condition* was defined as 3 or more of the following: (1) HES 1 or 2, (2) total bilirubin of less than 3.0 mg/dL, (3) serum albumin greater than 3.0 g/dL, (4) blood glucose greater than 80 mg/dL, (5) factor VII activity greater than 50%, and (6) prothrombin time INR less than 1.3. If the patient met the criteria for a stable improved condition status, ECHS was discontinued. The patient remained off of ECHS as long as the stable improved condition status continued, or if the patient received a liver transplant and had a functioning allograft.

Failure to improve. If the patient did not reach stable improved condition status, treatment with ECHS was continued for a total of 5 days until liver transplantation or until a contraindication to transplantation, a failure of standard treatment, occurred. If a condition that posed a contraindication to liver transplantation (eg, new-onset infection) while a patient was receiving ECHS, ECHS was continued under these guidelines while the complication was treated. If the complication did not respond to treatment within 5 days and the patient was not placed back on the transplant list, treatment was terminated.

Statistical analysis. Data are reported as mean ± standard error of the mean (SEM). Comparisons were made by using repeated measures ANOVA for the hemodynamic data. Paired Student *t* tests were used for univariable continuous data. *P* values < .05 were considered to be significant.

RESULTS

Nine patients who met the criteria for this phase I study were enrolled. Demographic data, the etiology of ALF, UNOS status, the duration of treatment, and the initial and final outcomes are demonstrated in Table I. The etiology of ALF in the status I group included acetaminophen toxicity, autoimmune hepatitis, primary nonfunction of orthotopic liver transplant (OLT) graft, Budd-Chiari syndrome with acute thrombosis of the OLT graft, and fulminant hepatitis B. The etiology of ALF in the status IIA group included chronic rejection of an OLT

Table II. Hemodynamic, hematologic, and coagulation parameters during ECHS (n = 9)

Parameter	*Baseline*	*Post ECHS*	P *value*
MAP (mm Hg)	81 ± 6	79 ± 6	.70
HR (bpm)	104 ± 5	107 ± 6	.62
SvO_2 (%)	72 ± 4	71 ± 2	.77
CO (n = 3)	6.5 ± 0.7	6.6 ± 0.5	.95
HCT (%)	30.1 ± 2.7	31.9 ± 1.3	.55
Platelets (1000/μL)	74 ± 13.3	65.7 ± 9.7	.50
INR (sec)	2.2 ± 0.2	2.0 ± 0.2	.44
Fibrinogen (mg/dL)	188 ± 22	177 ± 15	.58

ECHS, Extracorporeal hepatic support; *MAP,* mean arterial blood pressure; *HR,* heart rate; *SvO_2,* systemic mixed venous oxygen saturation; *HCT,* hematocrit; *INR,* international normalized ratio.

Table III. Effects of ECHS on hepatic toxins (n = 9)

Lab	*Baseline*	*Post ECHS*	P *value*
Total bilirubin (mg/dL)	20.3 ± 2.5	17.6 ± 2.7	.40
NH_3 (mg/dL)	130 ± 24	64 ± 16	.01
Fischer ratio*	0.98 ± 0.2	2.2 ± 0.5	.038
Free fatty acids (mg/dL) (n = 3)	1313 ± 240	571 ± 137	.055

ECHS, Extracorporeal hepatic support; *NH_3,* ammonia;
*Fischer ratio, (Valine + Leucine + Isoleucine)/(Phenylalanine + Tyrosine).

graft, alcoholic hepatitis, hemochromatosis, and autoimmune hepatitis. The mean age was 38 ± 5 years (median, 44; range, 13-62 years). The mean duration of treatment was 73.2 ± 12.2 hours (median, 72; range, 12-132 hours).

Effects of ECHS on hemodynamic, hematologic, and coagulation parameters. The effect of ECHS on the hemodynamic, hematologic, and coagulation parameters are shown in Table II. Patients tolerated treatment with ECHS well and were hemodynamically stable. There were no significant changes in MAP, heart rate, or SvO_2 when compared with baseline (MAP: Pre = 81 ± 5.6 mm Hg, Post = 79 ± 5.9 mm Hg, $P = .70$; heart rate: Pre = 104 ± 5.2 bpm, Post = 107 ± 6.2 bpm, $P = .62$; SvO_2: Pre = 72 ± 3.5, Post = 71 ± 1.7, $P = .77$). There were no significant changes in the hematocrit, fibrinogen levels, platelet counts, or INR during or at the completion of treatment. Finally, there were no technical problems encountered with the circuit, and no adverse mechanical effects or bleeding complications were observed.

Effects of ECHS on hepatic toxins and neurological function. The effects of ECHS on the removal of hepatic toxins are shown in Table III and the observed effects on neurological function are shown in Table IV. There was a significant decrease in the ammonia (NH_3: Pre = 129.8 ± 23.8 mg/dL, Post = 63.9 ± 16.1 mg/dL, $P = .01$) and free fatty acid levels (Pre = 129.8 ± 23.8 mg/dL, Post = 63.9 ± 16.1 mg/dL, $P = .01$). A decrease in the total bilirubin levels, which when compared with baseline did not reach statistical significance, was also noted (Pre = 20.3 ± 2.5 mg/dL, Post = 17.6 ± 2.7 mg/dL, $P = .4$). There was a significant increase of the Fischer ratio, the ratio of branched chain amino acids (Leucine + Isoleucine + Valine) to aromatic amino acids (Phenylalanine + Tyrosine), thought to be an index of the degree of encephalopathy (Fischer ratio: Pre = 0.98 ± 0.2, Post = 2.17 ± 0.5, $P = .038$). This decrease was predominantly caused by the removal of the aromatic amino acids.

All patients with the exception of one (patient 1, HES = 3) had an HES of 4 (hepatic coma) on enrollment. During and at the completion of treatment, there was a significant improvement in the HES (Pre = 3.8 ± 0.1, Post = 2 ± 0.7, $P = .02$). Three patients with cerebral edema who were monitored with intracranial pressure monitors had rising ICPs despite maximal conventional therapy, with a mean baseline of 37 ± 3.9 mm Hg, which significantly decreased during treatment with ECHS, to a mean of 13.3 ± 2.8 mm Hg ($P = .048$).

Effects of ECHS on liver function, renal function, and metabolic parameters. As can be seen in Table V, there was a decrease in the mean transaminase levels. In patients with renal dys-

Table IV. Effects of ECHS on neurological parameters

Test	*Baseline*	*Post ECHS*	P *value*
HES	3.8 ± 0.1	2 ± 0.7	.02
ICP (mm Hg)	37 ± 3.9	13.3 ± 2.8	.048

HES, Hepatic encephalopathy score; *ICP,* intracranial pressure.

Table V. Effects of ECHS on liver function, renal function, and metabolic parameters

Toxin	*Baseline*	*Post ECHS*	P *value*
AST (IU/L)	1996 ± 1279	904 ± 795	.09
ALT (IU/L)	1296 ± 651	732 ± 523	.03
Albumin (g/dL)	2.6 ± 0.2	3.3 ± 0.2	.01
Factor VII (IU/L)	14 ± 5	23.2 ± 5	.02
Glucose (mg/dL)	143 ± 23	192 ± 12	.12
Creatinine (mg/dL)	2.8 ± 0.4	1.4 ± 0.3	.02

ECHS, Extracorporeal hepatic support; *AST,* aspartate aminotransferase; *ALT,* .alanine aminotransferase

function there was a significant decrease in the creatinine level during treatment with ECHS (Pre = 2.8 ± 0.4, Post = 1.4 ± 0.3, $P = .02$). There was an increase in the albumin level, which was statistically significant and in glucose, which did not reach statistical significance. There was a significant increase in the factor VII levels (Pre = 13.9 ± 4.9, Post = 23.2 ± 4.8, $P = .015$), a coagulation factor with an extremely short half-life, which is relatively unaffected by fresh frozen plasma transfusion; therefore, it is a measure of native hepatic synthetic function.

Initial and late outcomes. Of the five status I patients, one recovered native hepatic function and is alive and well. Three patients were successfully bridged to transplantation, with a mean bridge time of 50.3 ± 11.1 hours (median, 67; range, 12 to 72 hours), one of whom was anhepatic for 70 hours. Of these patients, 1 patient is alive and well following OLT, 1 patient died intraoperatively during OLT, and 1 patient died 2 weeks after undergoing OLT (Table I). Of the 4 status IIA patients, 1 patient initially had complete neurological recovery and return of hepatic function to baseline but died 2 weeks after removal from ECHS as a result of portal vein thrombosis and multi-organ dysfunction. One patient had neurological improvement with a decrease in the HES but became ineligible for OLT as a result of intracranial bleeding from a previously unidentified chronic subdural hematoma. The other 2 patients had no neurological improvement and died of multi-organ dysfunction and sepsis (Table I).

DISCUSSION

The ideal hepatic support device would replace the metabolic, synthetic, and detoxification functions of the failing liver until the liver recovers from an offending insult or until liver transplantation is possible. Current liver assist devices include the cell-based and non–cell-based approaches described above. The rationale for the biologic systems is to replace all 3 functions of the failing liver. To date, the cell-based systems have shown improvement in measures of detoxification but have not convincingly documented improvement of the parameters of hepatic synthetic or metabolic function. This remains to be determined by the outcome of phase II/III trials. Currently, the only FDA-approved commercially available non–cell-based system for extracorporeal liver support is hemodiabsorption (Biologic-DT; Hemotherapies, San Diego, Calif), which uses a solid dialysis membrane with powdered charcoal in the dialysate. A pilot clinical controlled trial showed no improvement in survival for patients with ALF compared with control subjects.[15] A recent study suggests that there may be benefits with regard to hepatic encephalopathy for patients with decompensated cirrhosis.[3] Its role in the management of patients with liver failure awaits careful, and commercially unbiased, controlled trials.

In this report we have evaluated a non–cell-based extracorporeal liver support device that utilizes selective hemodiafiltration with countercurrent albumin dialysis. Multiple in vitro and clinical investigations have demonstrated the selective removal of both water-soluble and protein-bound toxins in the low and middle molecular-weight

range—which are known to cause hepatic encephalopathy and cerebral edema, and that possibly inhibit hepatic regeneration—without the removal of beneficial molecules such as proteins and various hormones.[25] The flexible nature of the albumin molecule allows it to interdigitate through the pores of the hemofilter, binding to the fibers and acting as a carrier protein. The multiple binding sites of albumin make it an ideal carrier to transport many of the hepatic toxins, in a mechanism similar to that which occurs at the hepatocyte membrane[25] (Fig 1). The activated charcoal sorbent columns on the dialysate side bind the hepatic toxins from the albumin molecules, allowing the onsite regeneration of albumin with free binding sites.

The primary outcome measure of this study was to assess the safety of this device in the treatment of patients with ALF who were listed for transplantation. Our results have shown that treatment with this system was well tolerated by the patients, with no technical failures, mechanical problems, or evidence of excessive bleeding. There were no adverse effects on the heart rate or blood pressure, cardiac output, or SvO_2 during or at the completion of treatment. Furthermore, patients with ALF and renal failure with fluid overload were easily managed with the ECHS. With regard to secondary outcome measures such as hepatic toxin removal and neurological function, it was observed that there was a significant decrease in some of the hepatic toxins, such as ammonia, free fatty acids, and aromatic amino acids, with an increase of the Fischer ratio at the completion of treatment when compared with baseline. The modest decrease in the bilirubin is attributed to the known poor binding capacity of activated charcoal columns in the dialysate circuit. Moreover, significant improvement in HES was observed for patients with encephalopathy as well as a decrease in the ICP of patients with cerebral edema.

The results with our technique of albumin dialysis corroborate the growing European clinical experience by multiple groups using albumin dialysis with the MARS device (MARS; Teraklin) in patients with ALF who are UNOS I and IIA equivalent. To date, 55 patients with acute on chronic hepatic failure with jaundice (status IIA), and 16 patients with fulminant hepatic failure (status I equivalent) have been treated. Observations from these studies demonstrate clearance of serum ammonia, bilirubin, copper, neurological improvement, and successful bridging to transplantation.[25] It should be noted that the MARS device includes sorbent columns in the dialysis circuit, which we and others have recently shown to be more efficient than the coated activated charcoal cartridges used in our study.

In summary, the results of this phase I trial demonstrate that treatment of patients with ALF by an ECHS device that utilizes hemofiltration with albumin dialysis is safe, with minimal hemodynamic effects. However, because this was a phase I, noncontrolled study, final conclusions with regard to the clearance of hepatic toxins, and the decrease in hepatic encephalopathy and intracranial pressure, must await performance of a prospective randomized controlled trial. One specifically cannot make statements regarding the clinical utility of this technique based on the data from the current study, especially because improvement of hepatic encephalopathy and the decrease seen in intracranial pressure may have been related to the resolution of the underlying cause of hepatic insufficiency rather than to treatment with albumin dialysis. Nevertheless, these initial results with encouraging efficacy data would suggest that further investigation of the technique of albumin dialysis with a phase II/III trial is warranted.

We thank the many members of the staff of the University of Michigan Medical Center who participated in the care of these patients, especially the hepatology and transplant surgery teams and the surgical intensive care unit staff, all of whom were essential in the treatment of these patients. We also thank the ECLS team, headed by Robin Chapman, RN, which is a highly specialized and uniquely dedicated group of individuals who carry the major responsibility for these patients. Physicians who cared for these patients include Drs. John Younger, Jonathan Haft, Steven Posner, David Foley, Judiann Miskulin, Jennifer Hirsch, Craig Reickert, and William Alarcon.

REFERENCES

1. Lee WM. Acute liver failure. N Engl J Med 1993;329:1862-8.
2. Riordan SM, Williams R. Hepatology: a century of progress—fulminant hepatic failure. Clin Liver Dis 2000;4:25-45.
3. Kaptanoglu L, Blei AT. Current status of liver support systems. Clin Liver Dis 2000;4:711-29.
4. Bihari D, Gimson AE, Waterson M, et al. Tissue hypoxia during fulminant hepatic failure. Crit Care Med 1985;13:1034.
5. Stockman HB, Hiemstra CA, Marquet RL, et al. Extracorporeal perfusion for the treatment of acute liver failure. Ann Surg 2000;231:460-70.
6. Chari RS, Collins BA, Magee JC, Dimaio JM, Kirk AD, Harland RC, et al. Treatment of hepatic failure with ex-vivo pig liver perfusion followed by transplantation. N Engl J Med 1994;331:234-7.
7. Argibay PF, Hyon SH, Martinez-Garbino J, Vazquez JC, Rosa-Diez G, Pekoli J, et al. A polyacrylonitrile membrane

interposition between a xenograft and a patient in fulminant liver failure: the concept of xenohemodiafiltration in clinical practice. ASAIO J 2000;46:505-10.
8. Watanabe FD, Mullon C, Hewitt WR, et al. Clinical experience with a bioartificial liver in the treatment of severe liver failure. Ann Surg 1997;225:484-94.
9. Sussman NL, Gisalon G, Conlin CA, et al. The Hepatix extracorporeal liver assist device: initial clinical experience. Artif Organs 1994;18:390-6.
10. Ellis AJ, Hughes RD, Wendon JA, et al. Pilot-controlled trial of the extracorporeal liver assist device in acute liver failure. Hepatology 1996;24:1446-51.
11. Denis J, Opolon P, Nusinovici V, Granger A, et al. Treatment of encephalopathy during fulminant hepatic failure by haemodialysis with high permeability membrane. Gut 1978;19:787-93.
12. Rakela J, Kurtz SM, McCarthy JT, et al. Postdilution hemofiltration in the management of acute hepatic failure: a pilot study. Mayo Clin Proc 1988;63:113-8.
13. Buckner CD, Clift RA, Volwiler W, et al. Plasma exchange in patients with fulminant hepatic failure. Arch Intern Med 1983;132:487-92.
14. O'Grady J, Gimson AES, O'Brien CJ, et al. Controlled trials of charcoal hemoperfusion and prognostic factors in fulminant hepatic failure. Gastroenterology 1988;94:1186-92.
15. Hughes RD, Pucknell A, Routley D, et al. Evaluation of the biological-DT sorbent-suspension dialyser in patients with fulminant hepatic failure. Int J Artif Organs 1992;17:657-62.
16. Dixit V, Chang TMS. In vitro and clinical studies of the removal of cortisol, thyroxine, insulin, and thyroid-stimulating hormone by coated charcoal haemoperfusion. Life Support Syst 1984;2:238-44.
17. Shiga Y, Fujihara K, Onodera H, Nagata T, Itoyama Y. Complement activation as a cause of transient hypotension during plasmapheresis. Artif Organs 1998;22:1067-9.
18. Stange J, Mitzner S, Ramlow W, Gliesche T, et al. A new procedure for the removal of protein bound drugs and toxins. ASAIO J 1993;39:621-5.
19. Stange J, Mitzner S, Risler T, Erley CM, et al. Molecular Adsorbent Recycling System (MARS)—a new membrane based blood purification system for bioartificial liver support—clinical results. Artif Organs 1999;23:319-30.
20. Awad SS, Rich P, Kolla S, Younger J, et al. Characteristics of an albumin dialysate hemodiafiltration system for the clearance of unconjugated bilirubin. ASAIO J 1996;43:745-9.
21. Awad SS, Rich P, Kolla S, Reickert C, et al. Can the clearance of phenylalanine be enhanced using an albumin dialysate hemodiafiltration system? Surg Forum 1997;48:151-3.
22. Awad SS, Sawada S, Soldes O, Rich P, et al. Can the clearance of TNF-alpha and interleukin 6 be enhanced using an albumin dialysate hemodiafiltration system? ASAIO J 1999;45:47-9.
23. Awad SS, Soldes OS, Sawada S, Rich PB, et al. Evaluation of a non-cell based extracorporeal liver support device in an animal model of hepatic failure. ASAIO J. In press 2001.
24. Orfanou P, Lewis DA, Punch JD, Bartlett RH. Developing indications for extracorporeal liver support (ECLVS). ASAIO J 42:10.
25. Stange J, Hassanein TI, Mehta R, Mitzner SR, Bartlett RH. The Molecular Adsorbents Recycling System (MARS) as a liver support system based on albumin dialysis—a summary of preclinical investigations, prospective randomized controlled clinical trial, and clinical experience from 19 centers. Artif Organ. In press 2001.