ME 450
Fall 2025 Semester
Final Report

Team 8 - Assistive Device for Vaginal Deliveries

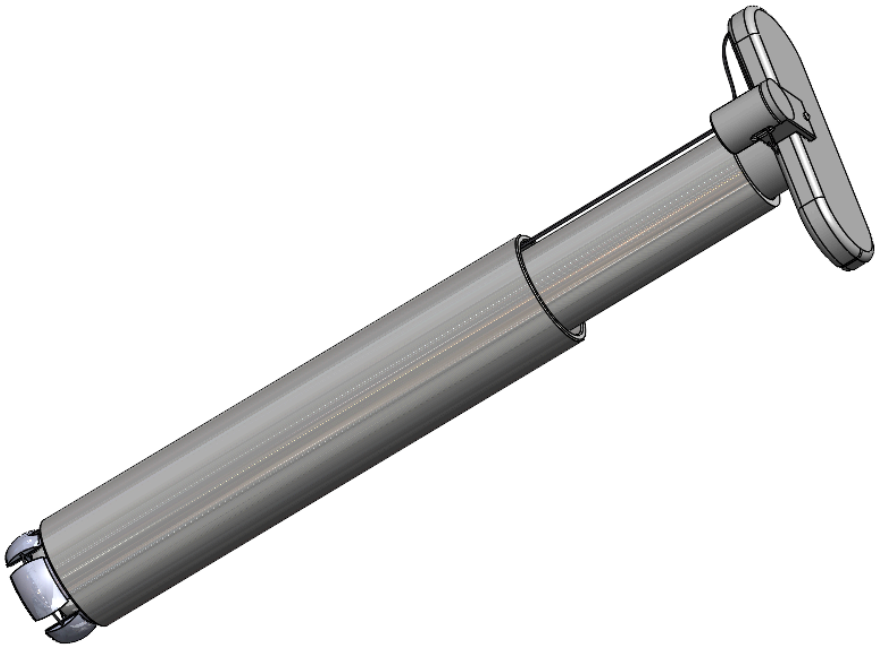

Chelsea Harvey
Paola Martinez
Hendrik Nykamp
Anya Wasilenski

Sponsors:
Dr. Julia Kramer
Dr. Dhanalakshmi Thiyagarajan

Executive Summary

Our team's focus for this project is on designing a novel Assisted Vaginal Delivery (AVD) device that reduces the level of training needed to operate in low-middle income countries (LMICs). The device needs to be safe, reusable, and affordable. The current AVD devices used in teaching hospitals in Ghana include obstetric forceps, ventouse vacuum extractors, and the Kiwi vacuum, all requiring highly trained clinicians to use the device and ensure maternal and fetal safety. When an AVD fails, whether through improper use or device failure, a cesarean delivery (C-section) is performed, which can carry higher risks and longer recovery times compared to vaginal births.

Our project uses an iterative, problem-oriented design process that involves a continuous acceptance of stakeholder feedback, literature analysis, and prototyping, allowing our team to make iterations to our project. Our stakeholders were categorized based on the scope of our design concept and analyzed using a plot of power (ability to influence a solution) vs. interest (level of concern for deciding a solution). Our highest priority stakeholders include pregnant people, midwives/doctors, low resource hospitals, and sponsors. High priority specifications are important to achieve for proof of concept, and will be used for later verification.

During the DR 2 time frame, concepts were generated for potential AVD devices using methods like individual brainstorming, morphological analysis, and functional decomposition. We filtered through these concepts to choose our first selected design, the multistage inflatable belt. Stakeholder feedback led to the reevaluation of our design and how we defined novelty. We learned that our primary option for engaging with and delivering the fetus is pulling. Our current design is inspired by octopus tentacles and has multiple arms that deploy and engage around the fetus's head. The entire system is then pulled to assist in delivery.

Engineering analysis helped develop our team's current selected design. These analyses include number and length of claw prongs, material selection for the build and final design, and force and pressure application on the fetal head. Featured in our build design include a cone that is used to guide the placement of the device on the fetal scalp, a handle that is pushed to deploy the claws further into the vaginal canal and around the fetal head, a drawstring mechanism that is tightened around the fetal chin area to tighten the claws against the fetal head, and an extension spring to ensure maximum traction force as defined for safety is not exceeded.

Verification of our device reflects part of the highest priority specifications, and are conducted within the scope of this project. This includes force measurements and simulated scenarios, both in delivery and computationally. Medium and low priority verifications are defined, but reserved for future work beyond the project timeline. Future validation involves three stages of testing, beginning at the build design and continuing onto the final design in a pre-clinical and clinical setting.

Design critiques for future engineers that continue this project were suggested, giving some ideas to overcome the challenges our team faced during the project timeline. Wrapping up the project with reflections and recommendations highlights the challenges our team has faced and our guidance to any future teams who continue down this project path.

Table of Contents

Executive Summary **1**
Table of Contents **2**
Revised Abstract **4**
Project Introduction and Background **4**
Intellectual Property 8
Information Sources 8
Design Process **8**
Design Context **10**
Contextual Factors 10
Stakeholder Analysis and Ecosystem Mapping 11
User Requirements and Engineering Specifications **14**
High Priority 15
Medium Priority 17
Low Priority 20
Concept Generation **22**
Concept Selection Process **25**
First Selected Concept **29**
Second Concept Selection **31**
Current Selected Design **32**
Problem Domain Analysis and Reflection **33**
Engineering Analysis **35**
First Design Analysis 35
Current Design Analysis 35
Build Design **39**
Final Design **44**
Verification of Engineering Specifications **46**
High Priority Specifications 46
Medium Priority Specifications 51
Low Priority Specifications 55
Validation of Final Design **57**
Discussion **58**
Problem Definition 58
Design Critique 59
Risks 61
Reflection **63**
Recommendations **65**

Conclusion **66**
Acknowledgements **67**
References **68**
Appendix A: Additional Concepts **73**
Appendix B: Engineering Analysis Calculations **77**
First Design 77
Current Design 77
Appendix C: Verification Plans and Results **79**
Appendix D: Validation Plans **84**
Appendix E: Project Plan **86**
Beginning to DR 1 86
After DR 1 to DR 2 87
After DR 2 to DR 3 88
After DR 3 to End of Semester 89
Appendix F: Build Design Bill of Materials **90**
Appendix G: Build Design Fabrication Plan **92**
Manufacturing Plans 92
Assembly Plans 102
Team Member Bios **107**
Chelsea Harvey 107
Paola Martinez 107
Hendrik Nykamp 108
Anya Wasilenski 108

Revised Abstract

Assisted vaginal delivery (AVD) devices are used during the second stage of labor when birthing patients require assistance pushing. Operating current AVD devices, such as forceps or vacuums, requires high-level training, such as by a Doctor of Medicine (MD). Births in low-middle income countries (LMIC) are not always facilitated by MD's, and therefore these patients requiring pushing assistance undergo a preventable cesarean delivery (C-section) which increases recovery time and risks to the birthing patient and fetus. This project addresses a need for a safe, reusable, and affordable AVD device operable by medical professionals with lesser training, such as midwives.

Project Introduction and Background

The need for this project was identified by the 2025 cohort of the Global Health Design Initiative (GHDI) Program through their needs assessment at Korle Bu Teaching Hospital (KBTH) and Komfo Anokye Teaching Hospital (KATH), the two largest teaching hospitals in Ghana. The sponsor for this project is Dr. Dhanalakshmi Thiyagarajan, an Obstetrics and Gynecologist who has practiced at KBTH and graduated with an undergraduate degree in biomedical engineering. In addition, our primary stakeholder contact for KBTH is Dr. Nana Oduro, a Consultant Obstetrician Gynecologist.

The second stage of labor is defined as the time from when the cervix is fully dilated (10 cm) until the birth of the fetus [1]. Obstructed labor occurs when labor fails to progress despite strong uterine contractions, mainly due to malposition or malrotation of the fetal head or cephalopelvic disproportion (CPD), where the fetal head does not fit through the maternal pelvis [2]. Other complications during the second stage of labor may include fetal heart rate abnormalities and maternal exhaustion [2,3]. Except for the case of CPD, an AVD may be used to aid in the birthing process. In LMICs, obstructed deliveries affect 3-6% of laboring women, and it is associated with high perinatal mortality rates, accounting for approximately 8% of maternal deaths [4]. Although AVD devices present benefits in managing obstructed labor, they are used in less than 1% of deliveries in Ghanaian hospitals, and when attempted, have a failure rate of 8.9% [5]. The low utilization rate of AVDs is often due to resource constraints and lack of training. AVD failures frequently result in emergency C-sections.

While C-sections can be an appropriate procedure in certain situations, they carry higher risks, longer recovery times, and higher associated costs than vaginal births. Vaginal birth recovery can be between 2-6 weeks whereas C-section recovery can take 6-8 weeks and patients are expected to stay in the hospital longer [6]. According to the World Health Organization [7], there is no maternal and neonatal mortality decrease after a 10% or lower threshold is achieved for percent of births per country that are delivered through C-section. In 2022, KBTH delivered about 10,000 births annually and over 49% of them were C-sections [8]. Therefore, the scope of this project excludes C-sections as a delivery solution due to the high rate of C-section deliveries in KBTH, and instead focuses on developing an AVD device option for LMICs.

In KBTH and LMICs, AVD devices that have been used include obstetric forceps, vacuum extractors (also known as a ventouse), and the Kiwi vacuum. The obstetric forceps are among the earliest of the devices, requiring the curvature of the metal tongs to be carefully placed around the fetal head. While the forceps have a higher success rate, defined as the avoidance of a C-sections, uterine scarring, and its implications for future pregnancy, they are also associated with more soft tissue trauma, perineal lacerations, and maternal morbidity by over 50% compared to vacuum devices [9]. Ventouse vacuums involve applying the suction and pulling force precisely to the fetal scalp during contractions. This device tends to cause less maternal trauma, although having a higher failure rate, longer average hospital stay after the procedure, and significantly less pain at 24 hours post procedure [9]. In KBTH, many problems involving the ventouse vacuum include part issues, electricity issues, the seal not being great ("pop-offs" of the device from the fetal scalp), and clinician use only [3]. The Kiwi vacuum is a single-use, manual, rigid plastic vacuum device that has been shown to be more easily deployable, with downsides including higher rates of neonatal scalp trauma [10]. The vacuums require precise placement of the fetal scalp, between the posterior fontanelle and anterior fontanelle. *Figure 1* below presents the placement of these vacuums on the fetal scalp.

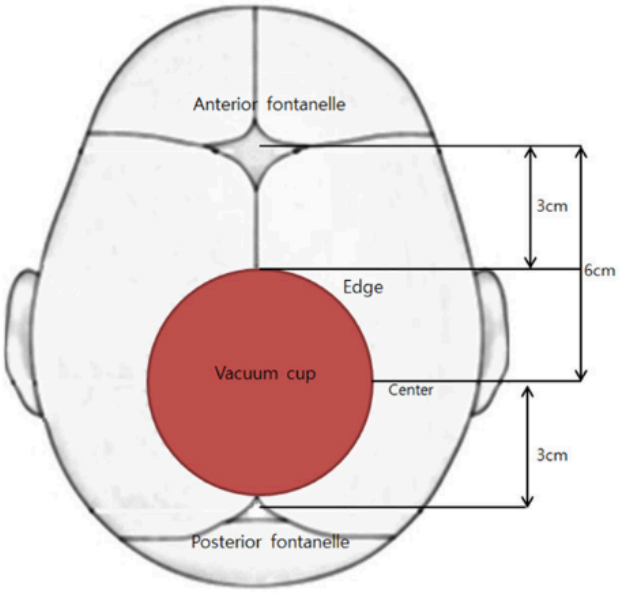

Figure 1. Proper vacuum cup placement on the fetal head [11].

These AVD devices are what are commonly used in KBTH and LMICs. In addition to these devices, several novel AVD devices exist, including a fabric sock extractor and the Odon device. The fabric sock extractor was developed under Professor Kathleen Sienko at the University of Michigan, and it was designed to be used for an LMIC setting. This device minimizes trauma to the birthing patient and the fetus by distributing the traction force more uniform across the fetal scalp, as well as no dependence on electricity [12]. However, there are several design issues including an unreliable cord lock mechanism [12]. The Odon device includes an inflatable air cuff around the fetal head. In 2023, out of 104 attempts of the device,

no emergency C-sections were administered [13]. The Odon device demonstrates a high success rate of avoiding C-sections, shows no issues for risk of perineal damage, and limited risk of soft tissue trauma [13]. *Table 1a&b (pgs. 6&7)* outline the benefits and limitations of these methods, presented in a figure for visual purposes.

Table 1a. List of AVD devices and their associated benefits and limitations.

AVD Device	Benefits	Limitations
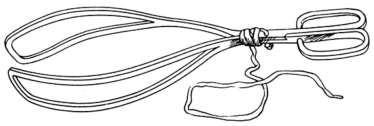 Obstetric Forceps [14]	- High success rate in achieving vaginal delivery [9] - Controlled traction	- Requires an MD or DO level of training [3] - Greater maternal morbidity [9] - Higher rates of maternal soft tissue trauma and perineal lacerations [9]
 Ventouse Vacuum Cup [15]	- Lower anesthesia requirement [9] - Less postpartum pain after 24 hours [9]	- Higher failure rate - Increased neonatal scalp injuries (cephalohema scalp abrasions) - Longer hospital stays - Requires training for precise fetal scalp placement
 Kiwi OmniCup Vacuum [16]	- Portable device [10] - Easily deployed - Over 95% of deliveries were successful with no more than 3 pulls and no longer than 10 minutes of application [10]	- Requires training for precise fetal scalp placement - High rates of neonatal scalp trauma [10] - Single-use [10]

Table 1b. *Table 1a* continued. A list of AVD devices and their associated benefits and limitations.

AVD Device	Benefits	Limitations
 Fabric Sock Applicator [12]	- Low cost - Distributed traction force across the fetal head [12] - Does not use electricity	- Limited clinical data published - Birthing patients disapproval [17]
 Odon device [13]	- Polyethylene sleeve for gentle traction [13] - Lower risk of maternal soft tissue injury	- Requires additional studies to confirm safety for clinical use [13] - Single-use

In summary, each AVD device presents advantages and disadvantages between the ease of use and their maternal and neonatal outcomes. Obstetric forceps remain highly effective in ensuring successful delivery but at the cost of extensive training and greater maternal morbidity. Ventouse vacuums and the Kiwi vacuum help reduce maternal trauma in comparison to the forceps, but carry higher rates of neonatal scalp complications and procedural failures including “pop-offs” of the cup from the fetal head. All of the current devices that are clinically used, which include the obstetric forceps, the ventouse vacuum, and the Kiwi vacuum, require a higher level of training. For our project, our main goal is to design an AVD device that lowers this training requirement to a midwifery level in the scenario that an LMIC hospital or clinical setting has a short staffing of MD or DO level professionals.

The information sources presented in this report are sourced from a mix of interviews and literature research, ranked primary and secondary, respectively. The primary insights were obtained from needs assessment interviews conducted by the 2025 GHDI cohort at KBTH and KATH, as well as through additional contact with KBTH gynecologists. In addition, two of our project team members visited the University of Michigan hospital to gain a better understanding of the procedure behind a birth through a live observation and interviewing the gynecologists and midwives working. Through interviews, we have learned that the University of Michigan hospital mainly uses the Kiwi device and the obstetric forceps when needing an AVD device. We were able to observe these two devices, gaining a better understanding of the size and how to use each device. Observing a live birth helped our group in getting a better picture of the entire birth procedure. Going forward with our project, we need to account for the cord and the placenta in addition to the fetus.

Intellectual Property

All students signed an intellectual property agreement granting a nonexclusive license to the University of Michigan, with the right to sublicense for the purpose of supporting the Global Health Mission. However, because this project is not likely to continue past this semester, the license is not actively used, and Michigan will not earn or keep revenues from our project since it did not advance beyond the proof of concept and prototyping phase.

Information Sources

Our team found a range of sources that helped support and guide us throughout this project, from understanding LMIC settings and the AVD devices currently on the market to making decisions about materials for the final design. Our sources included interviews with our sponsor and a contact in Ghana, both of whom hold MDs and are practicing OBGYNs in the department of their respective hospitals, papers from the National Institutes of Health and organizations like the Center for Control Diseases and Prevention and the World Health Organization. While we did not formally engage with a librarian, we are confident in the credibility of our sources. These materials were particularly helpful for benchmarking and background research, which we were able to access without issue. Information that was more difficult to gather related to manufacturing. When trying to quantify for a specification, we wanted to provide a manufacturing timeline, but it was challenging to determine a reasonable timeline for part replacement that would align with hospital use. Specifically, if a part broke and could not be replaced in a timely manner, hospitals might stop using the device, and it would no longer meet one of our requirements. Because shipping and replacement timelines for medical devices could not be discovered, an alternative way to define this requirement was found. Additionally, finding reliable quotes for AVD devices currently on the market was difficult, so we relied on our sponsor, who connected us with a doctor in Ghana to obtain more accurate and relevant information.

Design Process

At the beginning of this semester, this project has followed a design process that includes the problem definition. The need identification was assessed by the 2025 cohort of the GHDI Program, and concept exploration began in the following weeks soon after. Within the problem definition stage, our activities included researching, understanding, and framing the problem definition, as well as conducting a stakeholder analysis and defining requirements and specifications. These were obtained through interviews with stakeholders and clinicians, literature reviews, and benchmarking current AVD devices.

Our project has considered several design process models, as described by Wynn and Clarkson (2005) [18]. One example includes the Dym and Little framework, which is a stage-based, problem-oriented model that is structured in a linear pathway, beginning with need identification to solution development and verification. Although this model is useful for some

project designs, our project requires a more continuous integration and iterative process of stakeholder feedback. We aligned our design process as more of an activity-based and procedural model. This iterative model allows for more prototyping and refinement of our AVD device as more relevant information emerges. This design process is similar to the standard design process introduced through the ME 450 framework since that framework shows a more iterative approach than the Wynn and Clarkson model. Our team adopting an iterative, problem-oriented process allows us to be responsive to new information gained, which better fits the needs of our project. Contextual factors including training, costs, benchmarking current AVD devices, and understanding the environment surrounding LMICs require an ongoing, iterative evaluation process rather than a linear model for a design process. *Figure 2* visually shows the ME 450 Design Process Framework.

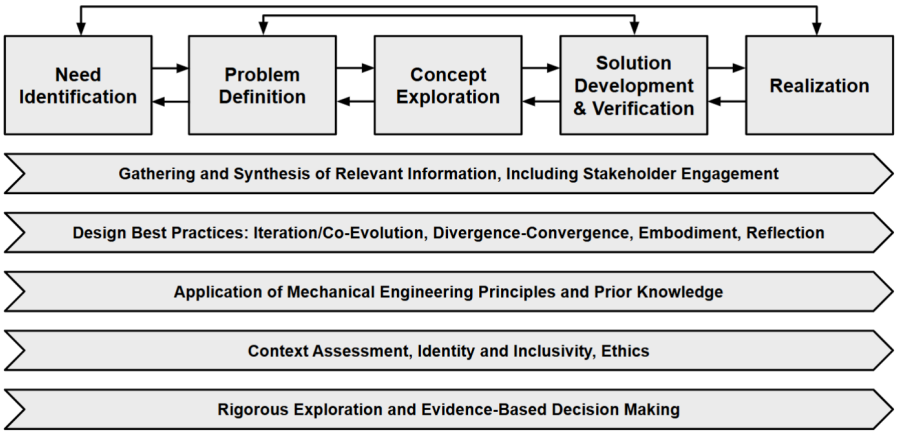

Figure 2. ME 450 Design Process Framework. This provides an iterative process.

As *Figure 2* shows, the design process framework presented to our team in class includes a five step iterative process. Our team also utilizes an iterative design process, presented in *Figure 3*.

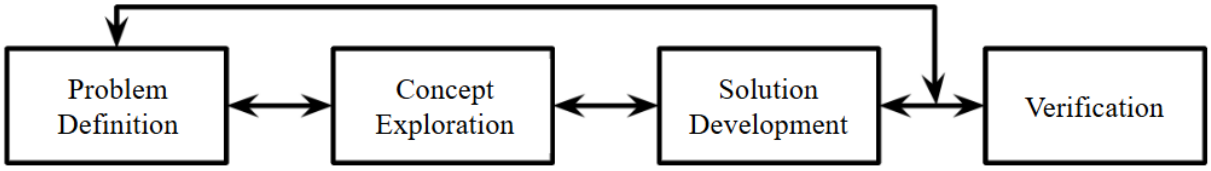

Figure 3. Design process as it pertains to our team project. This provides an iterative, problem-oriented process, allowing us to reevaluate our design based on newly obtained information.

Our design process, as shown in *Figure 3*, provides an iterative approach similar to the ME 450 Design Process Framework. The arrows pointing in both directions indicate that each step in the design process is iterative and can move forwards or backwards between stages. The arrow that extends from problem definition to between the solution development and verification block was added based on setbacks encountered during the semester, particularly when the team and sponsors were not fully aligned on the overall project goals. Additionally, due to these challenges, our team moved between concept exploration and solution development more than

once, which this iterative design process allowed, as we continued to gain sponsor feedback. Our project design process does not include needs identification, as that stage was determined by the 2025 cohort of the GHDI Program, which differs from the ME 450 Design Process Framework. Our project team goal was to complete solution development and verification and our team did manage to reach solution development however, only our top requirements and specifications were able to go through verification testing.

Design Context

Two important factors when developing the requirements and specifications of the design solution are contextual factors and stakeholders. As previously mentioned, our need was identified by a needs assessment that took place in Ghana but we have expanded our need to address LMICs in general.

Contextual Factors

Expanding the view from just forceps and vacuum, health technologies are designed for High-Income Countries (HICs) that have the resources to maintain equipment and trained staff to use it. When medical equipment is donated to LMICs, a large percentage goes unused because they were not designed for hospitals of limited resources. For example, when looking at sub-Saharan Africa, 70% of medical equipment was donated but only 10-30% becomes operational [19]. This could be due to any of the following reasons. Single-use items are problematic in settings where reuse is inevitable, such as LMICs. In regards to our problem statement, a device such as the Kiwi vacuum is not a sustainable solution because it is a single use design. Equipment that is reliant on electricity, for example the ventouse vacuum, is not best suited since it is estimated that 59.1% of LMICs hospitals do not have continuous electricity [19]. Training is also a big factor. Specifically, when looking in terms of trained maintenance staff, biomedical maintenance departments are one of the most neglected services in many hospitals. 60% of LMICs demonstrated that maintenance departments were understaffed and 80% of hospitals in the African region struggled to find experienced biomedical engineers [19]. Even if there is trained maintenance staff, difficulties still remain such as access and delays when ordering spare parts to medical equipment that is largely produced in HICs.

When looking at trained staff in terms of trained clinicians who can perform an AVD, the percentage varies throughout LMICs. When looking at Ghana, 46% of hospitals had a general practitioner, 37% being OB/GYN and 30% being a midwife, who could perform vacuum extraction [20]. This percentage was higher compared to general practitioners who could deliver with forceps. Additionally, few health centres and clinics reported staff that could perform an AVD with either instrument. To add on, our sponsor pointed out to us that not all birthing patients will have an appointed MD and our objective would be to create a design solution that could be operated by lower skilled clinicians like midwives that staff these health centers and clinics [3].

To continue, there are ethical concerns that come up when developing and implementing new health technologies. These include ensuring that the new design does not cause harm or increase risk for the birthing patient compared to methods currently available. Another important consideration is acknowledging that our team does not have years of medical training, especially in an LMIC setting, which makes it essential to value and implement the information and feedback provided by our stakeholders who have medical experience and who live or have lived in Ghana. Since we lack firsthand background knowledge, designing a device based on assumptions and purely literature review would be unethical, which is why engagement with our stakeholders is highly important.

These ethical considerations also relate to the power dynamics that influence our project. Because we lack specific knowledge regarding being an Obstetrician and working in a LMIC hospital environment, it is important to prioritize the perspectives of those who fall into both categories and to recognize that their input should hold greater influence over our design decisions than our internal team discussions. Diving deeper into power dynamics, within our team, one member was part of the GHDI 2025 cohort, yet they do not hold significant power over other members since they do not have the same level of expertise as our stakeholders. Their experience was helpful during the early stages of ME 450 and while conducting secondary research, but in terms of concept development, they are at a similar starting point as the rest of the team.

Stakeholder Analysis and Ecosystem Mapping

When categorizing our stakeholders, we chose to plot our stakeholders on a power versus interest graph instead of ranking them primary, secondary, and tertiary. This approach aligns better with our end goal being proof of concept for an AVD device that can be operated by a lower skilled clinician and compared to what is currently on the market. Stakeholders with "power" are those who have the ability to influence whether a new AVD device is developed, adopted or implemented. Whereas "interest" is a stakeholder's level of concern in whether this design is going to meet their needs or priorities. *Figure 4 (pg. 10)* shows the stakeholder matrix for our need statement. Additionally the tool of ecosystem mapping was used to further analyze and categorize the stakeholders of our project. This tool comes with six categories listed and explained *Table 2a&b (pgs. 11&12).*

Table 2a. Explanation of the different categories used for ecosystem mapping and stakeholder analysis.

Category	Definitions
Resource Providers	Provide financial, human capital, expertise in area, connections, and technological resources
Supporters & Beneficiaries of the Status Quo	Have an incentive for our need to go unsolved Benefits if status quo is maintained
Complementary Organizations and Allies	Supports the cause and provided important services Facilities ability to make an impact

Table 2b. *Table 2a* continued.

Category	Definitions
Beneficiaries and Customers	Directly or indirectly benefits from development from identified need
Opponents and Problem Makers	Undermine the ability to address need and oppose efforts to develop a solution
Affected or Influential Bystanders	Have no direct impact but could become affected by a developed solution Could influence potential solution

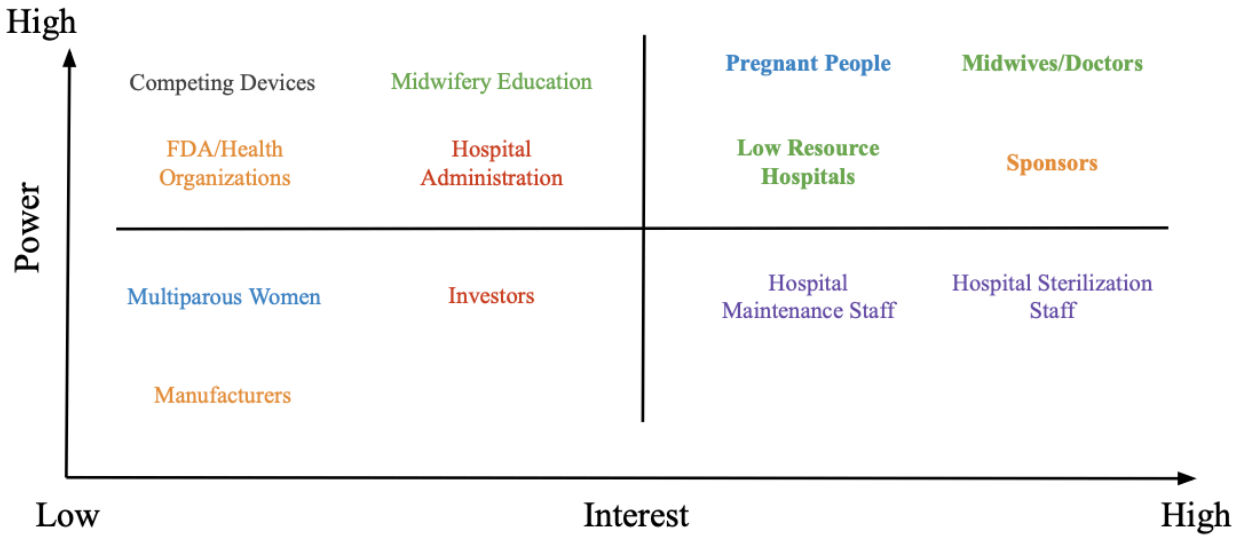

Figure 4. Stakeholder analysis matrix with interest along the bottom and power along the vertical axis. Stakeholders ranked as high power and high interest are bolded. The different colors are the different categories for stakeholders used in ecosystem maps. Red represents Supporters & Beneficiaries of the Status Quo, orange represents Resource Providers, green represents Complementary Organizations and Allies, blue represents Beneficiaries and Customers, purple represents Affected or Influential Bystanders, and black represents Opponents and Problem Makers.

The upper right quadrant, high power and high interest, was considered for stakeholders who would be most involved and important for proof of concept of a new design. Our sponsors are heavily involved through weekly meetings and continuous feedback which guides the design of the new AVD device in implementation and adoption which ranks them high in both categories and places them within Resource Providers. When talking to Dr. Nana, he mentioned how it depends on the hospital setting if a doctor or a midwife were to perform an AVD but that not all midwives are trained on to perform one with a vacuum [21]. Both doctors and midwives are placed as high power since they decide when and how to use the device in clinical settings and high interest since another objective we have is to make it more accessible to lower skilled clinicians. Doctors and midwives are also considered Complementary Organizations and Allies since they support the same goal of improving maternal and fetal outcomes in AVD. They may additionally be viewed as Beneficiaries and Customers since they would benefit from improved

ease of use with a lower skilled operated AVD device. Now looking at low resourced hospitals, they are the target audience for our device and they decide whether the device is implemented in their setting, making them highly influential. Also they have high interest because it addresses a need in their setting, which similarly places them as Complementary Organizations and Allies. In addition, benefiting from a low cost solution allows them to also be viewed as Beneficiaries and Customers. Pregnant people (who become birthing patients) have high power because they ultimately decide whether to consent to the new method to be used on them during their labor and high interest due to safety concerns. Because they directly benefit from this new design solution, they are placed as Beneficiaries and Customers.

Moving to the left quadrant, high power and low interest, is defined as stakeholders whose standards would need to be met if the device were to go to market. The solution would not be distributed, bought, or implemented if it did not meet these standards of FDA/Health Organizations and Hospital Administrations, meaning they have high power. On the other hand, they are considered of low interest because they are less involved in the early stage design process. To further distinguish these stakeholders, FDA/Health Organizations are placed as Resource Providers because of the standards they provide while they may also be viewed as Affected or Influential Bystanders since their requirements can influence the design solution without direct involvement. Hospital Administration may be viewed as Supporters and Beneficiaries of the Status quo because they want to avoid added cost and risk in daily operation but is similarly identified as Resource Providers because of institution resources they provide. Moving on, midwifery education is considered high power since adding training curriculum for this new device would greatly impact the implementation, they are considered to have low interest since training is only needed once the device is at the implementation stage. Midwifery education is viewed as Complementary Organizations and Allies since these programs teach what is considered best practice but they also serve as Resource Providers for how training is on AVD devices. Switching to competing devices, they are considered high power since they already have a market presence and would influence implementation but are low interest because they are not involved in the development of our design. As a result, competing devices align with Opponents and Problem Makers as they may want to reduce incentives to adopt a new solution and they may also function as Supporters and Beneficiaries of the Status Quo because then there is a reliance to use their devices that are currently on the market.

Moving down to the lower left quadrant, low power for design implementation and low interest for design validation, is also defined as stakeholders who are not important or least involved when considering proof of concept. When looking at manufacturers and investors, talking to one of our sponsors helps us realize they don’t currently influence design decisions or adoption with the goal being proof of concept [22]. Specifically, manufacturers may be viewed as Complementary Organization and Allies since they can offer advice on feasibility and production constraints and investors may also be ranked as Supporters and Beneficiaries of the Status Quo because of interest in similarly existing technologies. Manufacturers and Investors are both included as Resource Providers since manufacturers can offer knowledge in materials

and scalability of devices and investors can offer financial advice in later stages of development and commercialization. To continue on, when looking at multiparous women, they don't influence the adoption of the device and are not the focus group for this need but are included as Beneficiaries and Customers because they are the ones who could potentially be in a situation where an AVD device needs to be used.

Lastly, the bottom right quadrant, are stakeholders whose power for whose opinions and concepts we will keep in mind. Hospital maintenance and sterilization staff would have high interest since they can influence the usability of the new device but do not have power of implementation. Both these stakeholders are identified as Affected or Influential Bystanders because it could disrupt the sterilization workflow or require a separate sterilization process and maintenance staff is affected by upkeep of the device and storage.

This stakeholder analysis has been useful in deciding who shapes our design decisions because by identifying who we consider to have high interest and high power for our project goal, we have been able to reach out to people in this category and gain important feedback as we move forward through this project. The feedback we receive from them is highly valuable and influences our internal team discussions and decisions. For example, as previously mentioned, for low-resourced hospitals, we are working with Dr. Nana, from whom we have learned about the frequency of use of AVD devices at his hospital, the current protocol when using one before moving on to a C-section, and contextual information such as the cost of devices and time required to replace parts. This insight has helped us develop more well-rounded requirements and specifications.

We also have weekly meetings with our sponsor, Dr. Thiyag, who provides valuable feedback since she has practiced in both a LMIC and a HIC setting. This perspective allows her to provide insight from both contexts and to guide us in understanding our problem statement and further developing our requirements and specifications. Dr. Thiyag has also supported us by introducing us to Dr. Nana and coordinating a visit to the Obstetrics Department at Michigan Medicine for two of our members to conduct clinical observations. Through this hospital visit, our team was able to engage with a resident doctor and other hospital staff, nurses and midwives, which was especially useful since at that point we had developed some concepts and were able to receive valuable feedback on aspects we had not previously considered as engineering students. Additionally, the members who went to the hospital were able to interact with devices currently on the market such as the Kiwi vacuum and obstetric forceps, which affected the direction of our design and increased our understanding of existing technologies.

User Requirements and Engineering Specifications

Throughout the course of the semester so far, between research and discussions with our sponsors and other stakeholders we have come up with a list of requirements for our device. We have ranked our requirements by priority level, assigning each requirement a high, medium, or low level of priority. The assignments of these priority requirements were based on discussions within our group and with Drs. Kramer and Dhanu, as well as being based on how important

they are for a proof of concept. This means that some requirements, while being very important for a final design, may have been given a lower priority level if they are out of our scope and will not be addressed during our time in this class.

High Priority

Table 3a&b (pg. 15&16) presents our high priority engineering specifications and their associated user requirements. These specifications are critical to the success of our proof of concept.

Table 3a. Our high priority engineering specifications and their associated user requirements. Justification is provided in the table. These requirements are critical to the success of our proof of concept.

User Requirement	Minimal Specifications	Optimal Specifications	Justification
Safety of fetus	1.Traction force applied to the fetus does not exceed 200 N.		The force needed to move a fetus through an average pelvis is 422 N while the force provided by a uterus during a contraction was 240 N meaning an extra 182 N are needed by either maternal pushing or AVD devices [21]. The mean maximum traction forces of forceps are 154 to 188 N and potential traction forces due to vacuum extractors range from 118 to 308 N depending on cup diameter and applied vacuum pressure [21]. Traction force limit of 200 N prevents excessive force on a fetus's skull while still allowing for effective delivery. Additionally, a high-level traction force (221 N-minutes) would cause trauma to the fetus [22].
	2. Compressive pressure around the fetus's head not exceeding 150 kPa.		The highest pressure exerted around a fetus's head is around the lateral aspects of the fetal head at an average of 146 kPa [23].
	3. Device shall be able to release pressure or force on the fetus in ≤ 20 seconds.	3. Device shall be able to release pressure or force on the fetus in ≤ 3 seconds.	The fetus's head must be released within 30 seconds to avoid injury [12]. We expanded this to the entire body and chose a more conservative time of 20 seconds. The Kiwi vacuum releases at the press of a button (1-2 seconds) so we assigned this as our optimal specification [24].

Table 3b. *Table 3a* continued. Our high priority specifications and associated requirements.

User Requirement	Minimal Specifications	Optimal Specifications	Justification
Easy to Use	1. Operable by a birthing attendant, or clinician of similar training/experience after proper training on the device. Proper training is not defined as it is out of the scope of this course to define a full training plan. Within the course, proper training means detailed explanation of the device and a demonstration of the device being used.		Current AVD devices are only operable by doctors with high levels of training. To increase the use of these devices, it has been requested by our sponsor to lower the barrier to entry of training time (both overall and on the device itself) required to operate the device [3].
	2. Operating the device requires 1 user maximum.		Match capability of current AVD devices. Due to healthcare shortages (primarily in LMIC), our stakeholder has asked us to keep it to 1 minimum [25].
Can be operated without a dependence on external power	1. Device operation lasts at least 1 hour before needing to be recharged.	1. Device is optimally fully mechanical and is fully powered by end-user.	The current vacuum application times are, at maximum, 20-30 minutes and Korle Bu has around 1-2 operative births per day [26,27]. It is important that it can last for multiple births without a recharge because there are power outages so it might not be possible to charge the device between births.
Adjustable while in use	1. Adjusting the device takes ≤ 2 minutes.		Full adjustment should be able to be done within the smallest amount of time between contractions to be ready for the next one (contractions happen every 2-5 minutes in the second stage of labor) [28].
Reliable	1. Device can withstand 20 use cycles without mechanical failure or material degradation from sterilization.	1. Device can withstand 2500 use cycles without mechanical failure or material degradation from sterilization.	Current forceps can withstand a minimum of twenty rounds of sterilization [29]. However, the ventouse vacuum machines at KBTH have been there for at least 10 years, with 3 to 5 assisted deliveries per week [26]. So that would calculate to around 2500 assisted deliveries in 10 years.

Our first high priority requirement is safety of the fetus. We want to ensure that forces and pressures applied to the fetus do not exceed the safe amount, since safety of the fetus is paramount to the success of an AVD.

We also want our device to be easy to use. This was considered a high priority requirement because it was specifically requested by our sponsors, and it is one of the larger issues that hospitals in LMICs have [3]. Because of staffing issues, many people inside the hospital often have lower training than that which is required to operate the AVD devices, making a device that is easier to use could raise the number of people able to perform an AVD.

Since hospitals in LMICs can have electricity issues, we want the device to be operated without a dependence on external power. Because of power outages, devices that are plugged into the wall could be inoperable when they are needed. Therefore, devices that can hold a charge long enough to last for several births, or devices that are fully mechanical are preferred [19].

Another high priority requirement is that the device should be adjustable while in use. This is important for the safety of the fetus and the birthing patient. If something were to go wrong, being able to adjust the device quickly could help reduce the risk of injury or other permanent damages.

Having the device be reliable is also very important, and in this case, that means that the device is reusable. We want to prioritize this because many of the currently available devices are not reusable, and a reusable device will help to combat the amount of medical waste that is stored in the hospitals after they are no longer usable [26].

Medium Priority

Our medium priority engineering specifications and their associated user requirements are presented in *Table 4a-c (pgs. 17-19)*. These specifications make sure our proof of concept matches the criteria from devices on the market.

Table 4a. Our medium priority engineering specifications and their associated user requirements. A brief overview of the justification is provided in the table with more in the text. These requirements make sure our proof of concept matches the criteria from devices on the market.

User Requirement	Minimal Specifications	Optimal Specifications	Justification
Safety of the fetus	1. Pressure/traction force is visually displayed for the operator to see.		Match capability of current AVD devices. The Kiwi vacuum visually displays applied pressure [30].
Adjustable while in use	1. Adjusting the device takes ≤ 5 steps.		Match capability of current AVD devices (Vacca technique for vacuums and Kiwi vacuum specifications) [31,32].

Table 4b. *Table 4a* continued. Our medium priority specifications and associated requirements.

User Requirement	Minimal Specifications	Optimal Specifications	Justification
Easily portable between wards/floors	1.Total weight ≤ 7 lbs (3.18 kg).	1. Total weight ≤ 1 lbs (0.45 kg).	7 lbs is a user defined specification and matches other portable medical devices on the market [33]. Forceps typically weigh around 1 lb while the Kiwi vacuum weighs around 3 oz [31,32].
	2. Device does not require more than 1 person to transport in a vertical ascent of at least 20 stairs.		We have added 2 steps for a safety factor from a baseline of 18 steps per flight in a hospital [34]. Assumed that there is one flight between wards where the device would have to be potentially used.
	3. Device does not require more than 1 person to transport at least 50 meters.	3. Device should optimally not require more than 1 person to transport at least 100 meters.	The length of a hospital hallway is around 60 meters, with the length between buildings being around 100 meters [17].
	4. Dimensions during transport of the whole system should not exceed 0.03 m^3.	4. Dimensions during transport of the whole system should not exceed 0.02 m^3.	If the device will need to be transported between villages for home births, we want the device to be able to fit inside of a standard backpack [35].
Consistent contact (traction force and pressure) on the fetus	1. User set pressure and traction force shall remain consistent for ≥ 2 minutes after application.	1. User set pressure and traction force shall remain consistent for ≥ 5 minutes after application.	Pressure and traction forces need to remain on the fetus during contractions (1-2 minutes each) [28]. We added a safety factor of 2.5 for our optimal specification.
Perceived as medically safe	1. 5-point Likert mean scale score ≥ 3.5 for birthing individuals.	1. 5-point Likert mean scale score ≥ 4 for birthing individuals.	3.5 - 5 is rated as positive for a 5-point Likert scale [36].
Low Cost	1. Purchase price is less than $800.	1. Purchase price is less than $300.	Based on our minimum 20 cycles without failure, we derived $800 from the current price of a Kiwi vacuum (~$40) X 20 uses [32]. For our optimal, we used the price of obstetrical forceps. Both of these account for at least 20 cycle usage and are current AVD devices in use [37].

Table 4c. *Table 4b* continued. Our medium priority specifications and associated requirements.

User Requirement	Minimal Specifications	Optimal Specifications	Justification
Easy to set up	1.Setup time is ≤ 10 minutes.	1.Setup time is ≤ 5 minutes.	Match capability of current AVD devices. Current reusable vacuums take an average of 5-10 minutes to set up [26].
	2. Setup requires no more than 2 people when they are wearing surgical gloves.	2. Setup requires 1 person when they are wearing surgical gloves.	A clinician will set up the device while wearing medical grade gloves (surgical gloves). Nurses usually help with the less technical components (hand parts, etc.) [26].
Durable	1. Withstand a fall of 1.5 meters without being damaged.	1. Withstand a fall of 3 meters without becoming damaged.	Minimum ceiling finish height of a hospital room is 2.38 m and sterile medical devices need to be stored 5 inches under the ceiling height [38,39]. If the room is taller, and stored on a top shelf, it should be able to survive a fall. Minimum requirement is a bit higher than the typical height things are carried at [40].

While safety of the fetus and adjustability of the device also appeared in our high priority requirements and specifications, we believe that the particular specifications mentioned in *Table 4a (pg. 17)* would be defined as medium priority instead. This decision was made because these specifications we created to make our device more consistent with devices currently on the market, and they are not necessary for the success of the device.

Since the device will have to be transported continuously from birth to birth, we thought that the device should be easily portable between wards and floors. This was considered high priority because a device that cannot be moved around efficiently cannot be used effectively in the case of an AVD. Once it is determined that an AVD device is needed, we want the device to be transported to the birthing room as quickly as possible.

Our first medium priority requirement is that the device should have consistent contact with the fetus. Consistent contact is important during the birthing process because it ensures that the forces and pressures applied to the fetus remain constant, and there are no abnormal movements that could potentially cause harm to the fetus. Additionally, having consistent contact ensures that the device matches those that are already available.

The device should also be considered medically safe by birthing patients. Some devices have been shied away from in the past because of their appearance, so we want to produce a device that a patient would be willing to use. The more that the device is approved overall, the

more likely it is to be implemented, meaning more c-sections could be prevented by patients willing to use the device.

To keep the device accessible, we wanted to keep the cost low. Because this device is primarily designed for Ghana and other LMICs, it is necessary to take cost into account, since these hospitals may not have the same budgets as those in higher income countries. Lower costs means hospitals are able to purchase multiple devices, allowing more assisted births to take place than if there was only one device available to be used.

The device should also be easy to set up. Current devices do not take a long time to set up [26], so a new device should be able to at least match those that are currently on the market. Making the device easy to set up is also helpful for the clinicians and birthing patients, ensuring that the birth can take place as quickly as possible.

Our final medium priority requirement is durability. Having the device be durable keeps it from damage if accidents should happen, such as being knocked off of a table or being dropped during transportation. A durable device is needed so that the device can survive every day wear and tear and still be available whenever it is needed.

Low Priority

Our lowest priority engineering specifications and their associated user requirements are presented in *Table 5a&b (pgs. 20&21)*. These specifications are not critical to the success of our proof of concept, but are necessary for our final design, so they must be included.

Table 5a. Our low priority engineering specifications and their associated user requirements. A brief overview of the justification is provided in the table with more in the text. These specifications are not critical to the success of our proof of concept but are necessary for our final design.

User Requirement	Minimal Specifications	Optimal Specifications	Justification
Materials are Safe for Humans	1. Materials must meet ISO 10993 standards for biocompatibility. Testing the physical and/or chemical information ensures no cytotoxicity, sensitization, and irritation or intracutaneous reactivity.		ISO 10993 states that for surface medical devices contacting mucosal membrane or intact skin for a limited amount of time (< 24 hrs), tests must be done for cytotoxicity, sensitization, and irritation or intracutaneous reactivity [41]. This specification must be met in order for the device to be marketed.
	2. The design has no sharp edges (all radii ≥ 2 mm).		Sharp edges and objects, especially in a hospital environment, can cause injuries and spread disease [42,43].

Table 5b. *Table 5a* continued. Our low priority specifications and associated requirements.

User Requirement	Minimal Specifications	Optimal Specifications	Justification
Easy to Service	1. Maximum 4 individual parts requiring cleaning/sterilization and reassembly between each use cycle.	1. Maximum 2 individual parts requiring cleaning/sterilization and reassembly between each use cycle.	Existing solutions typically consist of only one or two parts needing sterilization. Forceps (where the whole device must be sterilized) can be one or two parts. Current vacuum solutions, such as the Kiwi and ventouse, sometimes consist of many parts, but only the cup and handle need to be sterilized before next use. Our optimal would be to match this level of minimum parts, however, we have given ourselves a factor of 2 to our minimal specification to account for the novelty of our device [3].
	2. Fasteners are standard metric sizes.		Ghana adopted the metric system in 1972, so sizes should be metric [44]. The usage of common standard sizing makes obtaining parts easier.
	3. Can be 100% serviced by biomedical engineers with prior knowledge of maintaining and fixing medical devices.	3. Can be 100% serviceable by reading the instruction manual and does not require a prior background knowledge in maintenance.	Hospitals in LMICs have understaffed maintenance staff or struggle to find appropriately experienced engineers so it's important that any hospital staff could service this device so it does not go to waste not being used [19].
End of Life Disposability	1. The device follows Ghana Standard Disposal methods for medical waste (sterilized before being sent to landfill as general waste).	2. Device or device components can be reused or recycled.	It is unknown what happens to the current medical devices for disposal. We want to ensure that our device can be handled according to regulation or at best, not create another waste stream [45].

Our first low priority requirement is that the materials used must be safe for humans. Safe materials are incredibly important for a finalized design, as they would ensure that the patients would not have negative reactions to the device. However, this is considered to be low priority because it is not necessary for our prototype, which is what we are trying to achieve to produce our proof of concept.

While likely out of the scope of our semester, we want the device to be easy to service. An easy to service device is preferred because it increases the amount of people who can work with it. A device that is too complicated might sit around for a long time while waiting for an expert to come along to fix it, or complex parts that need to be special ordered from far away would increase the time that the device is inoperable. Ensuring that these devices can be fixed quickly makes them more available, meaning the device can be on standby for future assisted births sooner than a more complicated device.

Our final requirement is end of life disposability. It is currently unknown to us how the hospitals in Ghana dispose of their medical devices, so we want to make sure that our device can be handled at least according to current regulations. We do know however, that many of the devices end up being stored in vacant rooms instead of being thrown away, which creates a stockpile of unusable equipment [26]. A device that can be properly disposed of would be more friendly to the hospital environment, and would help to keep the hospitals from continuing to acquire nondisposable waste.

Concept Generation

When the concept generation phase began, our mindset was that our design solution would be a novel device that was not similar to what is currently available on the market. When completing the Concept Exploration Learning Block, we used different methods to generate concepts. To start off with, functional decomposition identifies a product's main subfunctions to clarify what is needed to achieve the design's purpose. Morphological analysis organizes the subfunctions into a chart with multiple solutions to achieve each subfunction, and different combinations of the solutions from each subfunction can generate many possible solutions and serve as an effective way to explore the design exploration space. This process helped us recognize the different ways to engage with the pregnant patient and fetus and allow us to see where there could be areas for innovation in a novel design. Additionally, brainstorming was another strategy our team went through individually, where the goal was to invent something new and valuable, and the guidelines for a successful brainstorming session consisted of encouraging wild ideas, going for quantity, and staying focused on the topic. Because brainstorming encouraged divergent thinking and moved away from the conformities of subfunctions, it allowed the team to explore unconventional ideas that might not typically be considered for tangible medical tools. After completing these concept generation processes individually, we each had 20 ideas, making our total amount of ideas 80. Examples of individual concepts can be seen in *Figure 5 (pg. 23)*.

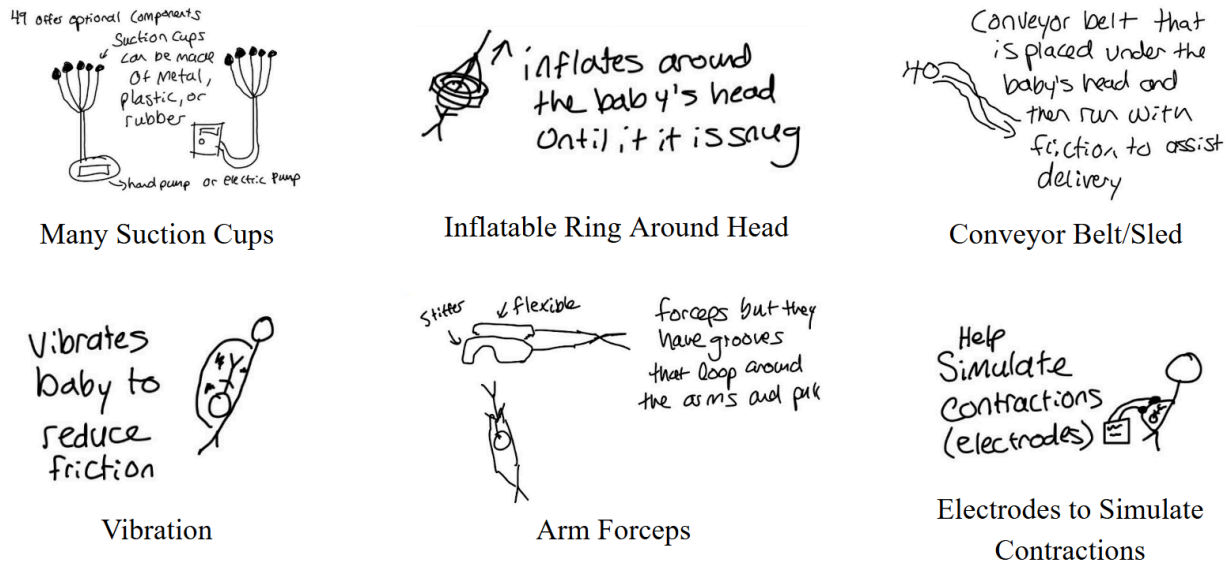

Figure 5. Six examples of concepts generated during the individual ideation stage. These examples were chosen as they describe the divergent thinking and exploration of the multiple different ways to assist in the delivery of a fetus.

While these 6 included wild concepts such as vibrating the fetus out and a conveyor belt to slide the fetus out, more detail is provided in *Appendix A: Additional Concepts (pgs. 73-76)*, we individually selected our own top five ideas out of our 20 that we believed were most feasible within the scope of ME 450. After comparing our individual top five concepts, we noticed overlapping themes across ideas such as assisting the delivery through an external method or guiding the fetus out using traction forces. Recognizing these similarities, we shifted our focus to brainwriting to build upon and refine these shared ideas rather than generate entirely new ones. Brainwriting is similar to brainstorming but with more structure and direction. It involves writing out individual concepts and passing them to other team members to expand upon or suggest modifications. Using this method helped us combine promising elements from different ideas and move closer to a refined concept for selection. The concepts resulting from brainwriting can be seen in *Figure 6 (pg.24)*.

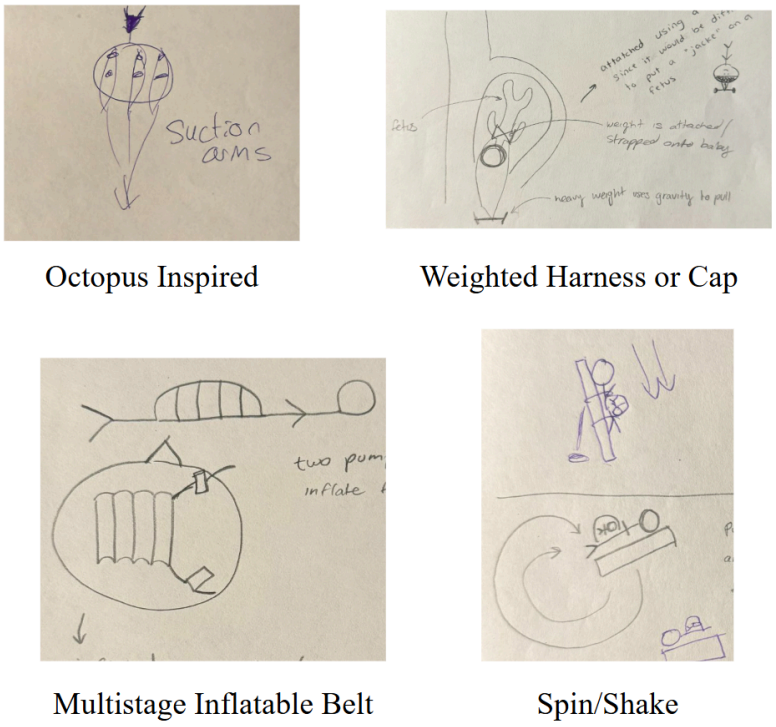

Octopus Inspired | Weighted Harness or Cap

Multistage Inflatable Belt | Spin/Shake

Figure 6. Four examples of ideas generated during the brainwriting activity.

This also made us realize that our brainstormed ideas were very similar. This makes sense because there are only so many ways to approach an assisted vaginal delivery while considering the safety of the birthing patient and fetus and the simplicity of the designs on the market currently that don't require much space to store. This led us to recognize that the overall project could be divided into three subfunctions, as seen in *Table 6*.

Table 6. A functional decomposition chart identifying different ways of engaging with the fetus, where the necessary force to assist the delivery is applied, and how the force is applied.

Scenario	1	2	3
Grab	Part of Body	Whole Head	No Grab
Apply Force	Interior	Exterior	No Applied Force
Pull or Assist	Manual	Mechanical Assisted	Electrical Assisted

The first subfunction addressed how the device would engage with the fetus, by grasping only the head, the entire body, or making no contact and instead using an external approach. The second subfunction involved how force would be applied, either internally to the fetus, externally to the birthing patient, or with no force applied to either. The third subfunction considered how the device would assist with delivery, through manual operation similar to how forceps require manual insertion and operation, being mechanically assisted like the Kiwi vacuum with the hand pump, or being electrically assisted like the ventouse vacuum. This framework helped us identify which combinations could be feasible, for example, options that applied force externally but

required full-body engagement were eliminated due to impracticality, and this also included ideas that did not interact with the fetus (no grab) or the birthing patient (no force applied). It also helped us focus on a design that is not electrically assisted since the context we are focused on does not have continuous electricity.

We also took a step back to view the situation as one where something is stuck and needs to come out, in this case the fetus. This perspective led us to look at other technologies such as the LifeVac, which is used on young children and older individuals who are at higher risk of choking [46]. We also looked at the Chinese finger trap and how it creates a grip on a finger. In addition, we explored preventative options, like consuming raspberry leaf tea and dates, that could help birthing patients prepare for labor so that we could better understand the birthing process. Looking at these parallel examples of creating controlled suction or grip that could be applied during delivery did not directly lead to a final concept, but they allowed us to examine basic principles of pressure application and grip that may help guide us later on.

Concept Selection Process

At the beginning of our concept selection process we had close to 100 ideas, which we had come up with independently from one another. Meeting up as a team, we were able to compare our ideas and find common themes between many of them, and even some repeat ideas that we had each thought of on our own. After some discussion amongst ourselves, we narrowed our number of ideas down to around 20, largely choosing ideas that were novel, since that was the main criteria we believed we had to meet at the time. We then decided to rank these ideas using a 2x2 matrix of reusability (which was defined as our reliability specification) vs ease of use, which were chosen as our first set of criteria because they are two of our high priority requirements. We placed our ideas onto the matrix as a team, with the placement depending on how well or poorly we thought the described device would perform in the two categories. During the process of completing the matrix, we came to the conclusion that a second matrix would be needed, and so created a second, using functionality vs feasibility. This matrix was used to rank how well we thought the idea would work with how well we thought we could make it. This way, we were able to eliminate some ideas that could be both reliable and easy to use, but not possible for us to create. The 2x2 matrices described are shown in *Figure 7 a&b (pg. 26)*.

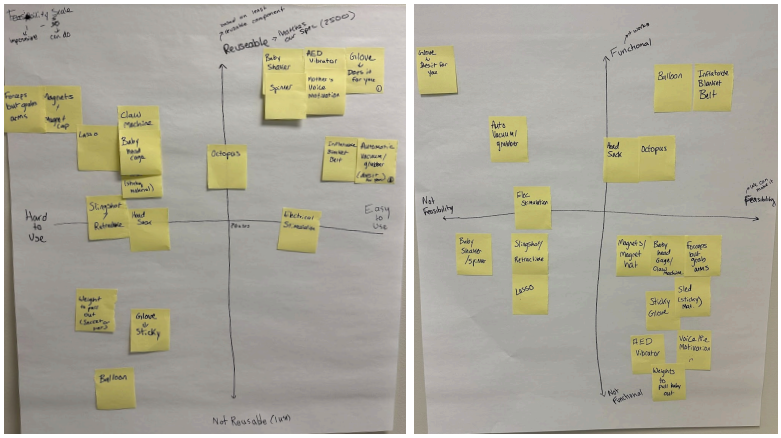

a. b.

Figure 7a&b. Two 2x2 matrices created during the concept selection process. *a* shows reusability vs ease of use. The axis for ease of use ranges from not reusable to 2,500 uses. *b* shows functionality vs feasibility. Placement was based on our judgement as a team, ideas that performed well on each axis were placed in the upper right quadrant.

To finally narrow down to our top five concepts, we looked at where our ideas ended up on the matrices. There were a couple ideas that were highly ranked on both matrices (in the upper right quadrant), so these were automatically selected. Next we looked at ideas that might be harder to implement based on how we ranked them for feasibility, but were largely unique from current assistive birthing technologies. Lastly, we looked at devices that were similar to currently available products, but reconsidered how they could be improved for LMICs. The top five concepts we landed on were an inflatable belt, an octopus device, an inflatable balloon, electrical stimulation, and a reusable version of the Odon device. We created a modified pugh chart for these five ideas, seen in *Table 7.*

Table 7. Modified Pugh Chart showing which high priority requirements are met by our top five concepts. O indicates that the optimal specification is met, M indicates that the minimal specification is met, and X is used if specifications are not met. We came to these conclusions as a team through discussion of advantages and disadvantages of each device.

Device	Easy to Use	Safety of Fetus	Adjustable While in Use	Reliable (Reusable)	No Dependency on External Power
Belt	O	X	O	O	O
Octopus Device	M	O	O	M	O
Balloon	X	O	O	X	O
Electrical Stimulation	X	O	O	X	X
Reusable Odon	O	O	O	O	O

As a group we looked into details and characteristics of each device, and how we thought they could be implemented. When we all agreed that the top specifications could be met, we gave the requirement an O. For example, we all initially agreed that each device could be made in a way that was safe, and adjustable. The belt initially performed well in all categories, but this was changed to not include safety of the fetus when informed that it is not safe to apply fundal pressure to assist labor [3]. The reusable Odon did perform well in all categories, with the only thing keeping it from initially being ranked at the top was that it was not a novel device. The Octopus device had concerns with its ease of use and reliability, stemming from exactly how the device should be placed on the fetus' head and our initial thoughts on what materials could be used. The balloon had concerns with the same requirements, although to a greater extent. The need to place the balloon behind the fetus greatly increases the difficulty and level of training needed, which was confirmed by discussion with our sponsor [3]. We determined that the material for the balloon would also not lend itself well to being reusable. This was given an X as opposed to the Octopus' M because a greater portion of the device would not be reusable, making the whole thing a consumable as opposed to a small portion. Last, the electrical stimulation device was determined to be the worst of the options. High training would be needed to ensure that the nodes are correctly placed in order for the device to be effective, and we also believe that the nodes would be consumable, and new ones would have to be used for each patient. Additionally, the device would need external power to operate, as it constantly requires electricity to function.

The inflatable belt device is an external wearable device consisting of multiple inflatable inner tubes which can apply a force onto the birthing patient's womb. It was chosen because we felt it was the best fit for all our requirements used in our matrices. In addition to this, we believe that the belt device offers many advantages. First, we think that it would be easy to use, as the device is purely external. We also think it would be safe and adjustable, as the amount of force and contact it makes is dependent on how inflated it is, meaning air could be let out if adjustments needed to be made. Another advantage is that the device would not need external power, since it could be inflated using some sort of manual pump. However, a disadvantage of the device, and particularly the pump, would be the time it takes to inflate the device. Another disadvantage is that it only applies to one form of assisted birth, maternal exhaustion. This means that it would only help with a portion of the births that require assisted deliveries, and not prevent as many emergency c-sections as we originally hoped [26].

Our second concept that performed well on the matrices was the octopus device. This device, after being placed against the fetus' head, would be activated in some way, causing the arms to constrict around the head before being pulled out by a clinician. The advantages of this device are that it would be safe and adjustable. Having multiple arms would allow the force to be more spread out across the head, lower the risk of contusions occurring, and the device could be readjusted if the application went wrong. Our design for the device would also be easy to use. Once placed above the head, activation would cause the device to come into secure contact with the fetus' head, negating the need for technical training for placement. While not originally

designed in a way that is fully mechanical, after a bit more iteration due to our first selected design being deemed unsafe we were able to create a design that is not dependent on external power, increasing the benefits of this design. One disadvantage is that the material used would have an impact on how reusable the device is, with likely candidates having a shorter use-life, much like the suction cups of vacuum devices.

One of the more novel devices that we looked into was an inflatable balloon that could be placed in the womb behind the fetus' feet and by the fundus, top of the uterus, which would push the fetus out of the birth canal when inflated. This device only performed well on one of our matrices because of its uniqueness, and since we were trying to come up with novel ideas at the time, we decided to proceed with it as a top concept. One major advantage of the device is that it would not require external power, since the balloon could be filled with a manual pump. Another advantage is that it could be adjustable while in use, with force, much like with the belt, being adjusted based on the inflation level of the balloon. However adjusting the positioning of the balloon itself would be significantly more difficult, and would likely require fully removing the balloon and starting over instead of a simple adjustment. There were multiple disadvantages for this device as well. It would not be easy to use, as the balloon would be difficult to place, and the clinician would have to be wary of avoiding the umbilical cord and placenta during the procedure [26]. Another concern that was raised was how the pressure would be applied, with concerns being that more pressure would be pushing against the back of the womb than would be considered safe, instead of all of the pressure going towards pushing the fetus [47].

Another novel concept that we chose was electrical stimulation. This would be a device designed to make the muscles contract using a method called Neuromuscular Electrical Stimulation [48], pushing for the birthing patient. This device would be safe for the fetus, since it would not come into contact with it, and would be adjustable by changing how much it causes the muscles to contract. Another advantage would be that there is a possibility of it being reusable, although some consumables would likely be necessary. However, there are some disadvantages, the first of which would be that it would not be easy to use. The device would require careful placement onto the birthing patient to ensure that the correct muscles are being stimulated, and wrong placement could cause unpredictable behavior. Additionally, since it is using constant electrical stimulation, this device would probably require external power. We also believe that this concept would require the use of consumables, which would lower the reusability of the device.

Our final top concept was similar to the Odon device, but with a focus on eliminating consumables and making it as reusable as possible. This concept has all of the advantages that the Odon device offers, and it would operate with already proven techniques. It is safe, adjustable, does not require external power, and most importantly, it is easy to use. Another benefit of creating a device that is similar to the Odon device is that it has already been well received by birthing patients [13]. In addition to this, our new concept would focus on reliability, making the device reusable so that it could be used many times in LMICs. One downside to this

concept is that, because it is similar to the Odon device, we would have to be careful of existing IPs so that we do not infringe on any copyrights held by the Odon device.

This was used to order our top five concepts, based on how successful we thought each idea would be, where the belt and reusable Odon were at the top, followed by the Octopus device, and then the balloon and electrical stimulation. We decided that the belt would be placed ahead of the reusable Odon because at the time we were aiming to use a more novel idea.

Reflecting on some of our initial ideas from the beginning of the class, some of the first concepts that occurred to our team were the balloon device previously mentioned, and a sled-like design that could be slid under the fetus and pulled out with the fetus resting on top which can be seen in *Appendix A: Additional Concepts, Figure A.5 (pg. 75)*. While the design of the balloon device remained largely unchanged, the sled design is quite different to all of our top five concepts. It appears as though there was some fixation on the balloon device, however as time has gone on since we selected our top five concepts, we have left this one behind, deeming it to not be as effective as was initially thought. We also experienced issues with fixations on currently available devices, particularly forceps and vacuums. Many of our initial concepts operated in similar ways to these devices, which was problematic when we were trying to come up with more novel ideas. With further development of these concepts, our goal is to create a device that can fit all our requirements and specifications while also pleasing our sponsors.

First Selected Concept

The main goal when developing our first selected design was to create a novel AVD device that differed from the forceps or vacuum devices, since most devices on the market fall into one of these categories. Our team prioritized novelty as a key design component based on our understanding of the initial feedback from our sponsor. One main characteristic that is shared between the forceps and vacuum devices, including both the Kiwi vacuum and the Ventouse vacuum, is that they utilize a pulling force on the fetus. To implement a novel characteristic into our design concept, our team determined that our device needed to utilize a method of assisted delivery that did not pull directly on the fetus. With this decision, our team reviewed our top five concepts as determined through our concept selection process. The multistage inflatable belt and the electrical stimulation device were the only devices in our top five selected concepts that did not use a pulling force on the fetus. Our team used a modified Pugh chart provided by *Table 7 (pg. 26)*, comparing our high priority specifications with each of the top five selected concepts, to narrow to one selected concept. The multistage inflatable belt was shown to meet more optimal specifications than the electrical stimulation device. Therefore, we proposed the multistage inflatable belt as our device for assistive vaginal delivery. This device would be wrapped around the birthing patient's abdomen and secured at the back using a hook and loop mechanism, similar to a blood pressure cuff. The device consists of multiple inflatable tube chambers that would be sequentially inflated beginning near the fundus down towards the top of the pubic bone using a manual pump. *Figure 8* shows the belt and pump for the tube chambers.

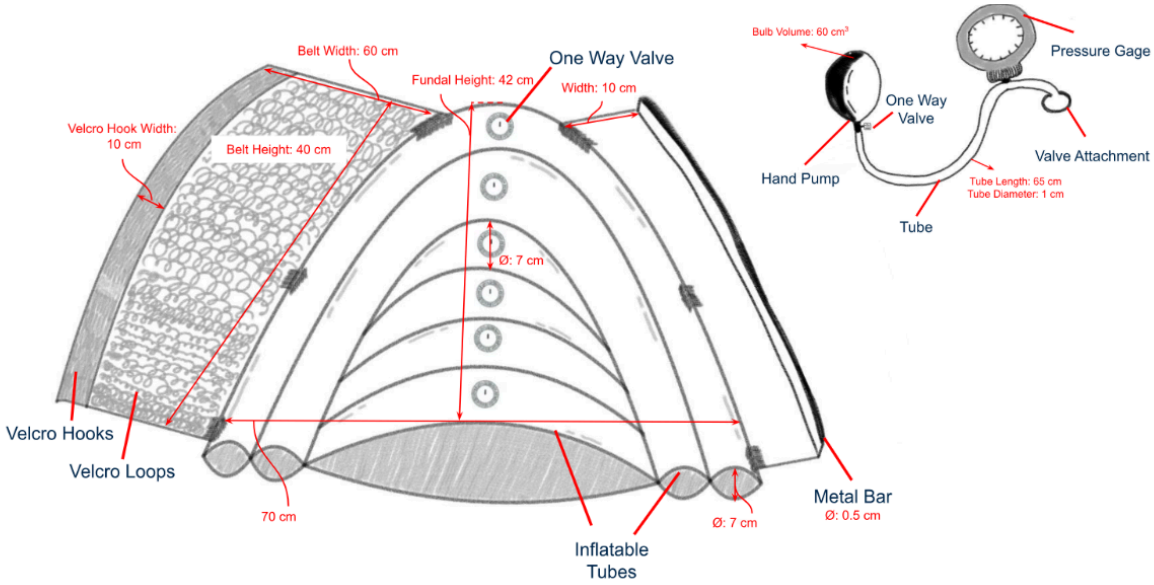

Figure 8. The multistage inflatable belt. Height dimensions are based on the average fundal height range (distance from the top of the pubic bone to the top of the uterus) of birthing patients. The higher end of this range (36 cm) was used for the outermost inflatable tube [49]. Width dimensions are based on the average abdominal circumference of women in India [50]. Abdominal circumference is not typically medically measured due to factors outside of pregnancy (patient's body mass index (BMI), etc.). Hand pump dimensions were found by approximating the dimensions of a manual blood pressure hand pump.

The idea is that this belt would apply external pressure to the birthing patient's abdomen to assist with delivery. The pressure is applied starting at the top of the fundus, and as the fetus moves along the vaginal canal, the next tube chamber would be inflated to continue the motion of pressure towards the top of the pubic bone. The hand pump is attached individually to each inflatable tube by a one way valve, pumped with air, detached from the tube, and moved to the next tube, with this process repeating itself. The one way valve on the inflatable tube is a silicone tab that blocks air from leaking out of the belt when the pump is detached. *Figure 9* presents this subsystem mechanism.



Pumping air into Belt Silicone tab prevents air flow out

Figure 9. Subsystem mechanism of the hand pump and one way valve on the inflatable tubes. When air is pumped into the belt, the silicone tab is pushed sideways, allowing air to enter the inflatable tube. When the hand pump is not actively pumping air into the tube, the air pressure from inside the belt will push the silicone tab against the opening of the belt, preventing air from flowing out and keeping the device inflated. To deflate, the tab is pushed inwards with a finger or pulled out halfway to allow airflow out.

Other inflation methods, including a double hand pump and foot pedal pump, were considered to aid in increasing the air flow into the device. After developing our first selected

concept, our team visited the University of Michigan hospital to observe a live birth and gain better insight on the birthing process. We were able to get opinions from a midwife and doctor on duty of our selected device, and determined that external pressure on the uterus is only used to help break the water of the birthing patient, and should not be used to help with labor due to safety concerns [51]. External pressure applied on the uterus, especially when it is not in coordination with the contractions of the birthing patient, would not be enough force to fully deliver a fetus and can cause tears to the vaginal lining. In addition, we presented our selected concept to our sponsor and received feedback that external pressure of any form onto the birthing patient as it is related to assisted vaginal delivery is unsafe. After further discussion, our sponsor clarified to our team that the only safe way to assist in a vaginal delivery is to pull the fetus out by grabbing the fetus directly [3]. Our initial concept failed because it proved unsafe for a birthing patient through stakeholder and sponsor feedback. Due to multiple preliminary stakeholder analysis, we began brainstorming other devices that do not use external pressure as a mode of assisted vaginal deliveries.

Second Concept Selection

When reflecting on what our team deemed as a novel characteristic, we assumed that the method of delivery for pulling the fetus needed to change in order for our concept to be novel. This assumption was incorrectly made by our team. According to our sponsor, the only method of delivery that is safe to assist in a vaginal delivery is to directly grab and pull the fetus [3]. In the future, our team needs to clarify with our sponsor what their definition of novelty is to ensure that we understand the goals of the project in its entirety. This needs to be clarified when we are first speaking to our sponsor, before selecting a concept, so that the team isn't set back by developing a concept that isn't medically safe. After we were informed that our first selected design was unsafe and that we could not proceed with it, we went back to the concept selection process. We took another look at our Pugh Chart, as seen in *Table 7 (pg. 26)*, looking at all of the options that used a pull force, since that is the only realistic way to perform an AVD [3]. This left two options, which were the octopus device and the "reusable Odon." Through re-evaluation, the "reusable Odon" device was the only other device that theoretically met all of the highest priority specifications. This design concept had not been chosen as our first selected design because we had thought that the "reusable Odon" was not a novel design, being very similar to the Odon. In contrast, our sponsor approved of this design as novel because of the reusable aspect of our design. In spite of this, while selecting our current design, we still opted away from a "reusable Odon" as we still believed that it did not satisfy the novelty that our sponsor was looking for. Because of this misunderstanding, we selected the Octopus device for our current selected design. Adding to the case for the Octopus design, we were able to improve our initial idea of it to make it operate fully mechanically, making it an even more desirable option.

Current Selected Design

Our focus has now shifted towards designing an AVD device that brings a novel characteristic to our design as defined by our sponsor. Even though our selected concept was chosen because of heavy sponsor influence and helping with defining novelty, our team's objective selection process would also point in this direction of prioritizing reusability, or reliability as defined in our requirements, and lower training because these were the main concerns determined by the 2025 GHDI cohort's needs assessment.

As mentioned, with this new information, we have designed our current selected design: the octopus device. This device consists of a claw-like grabber to grab the fetal head using multiple, flexible arms, and a handle for the clinician to hold and pull the fetus out. The device would be inserted and deployed around the fetal head while in the vaginal canal. The claw-like grabber allows for a more distributed force around the fetus, increasing safety. In addition, this device offers a more intuitive attachment method. Instead of attachment to the fetal scalp using a suction device that requires an MD or DO level of training for precise placement, our device wraps around the fetal head. This allows for midwives or other healthcare professionals to use the device, benefitting LMICs where higher trained clinicians may not always be available. *Figure 10* provides a preliminary sketch of the octopus design.

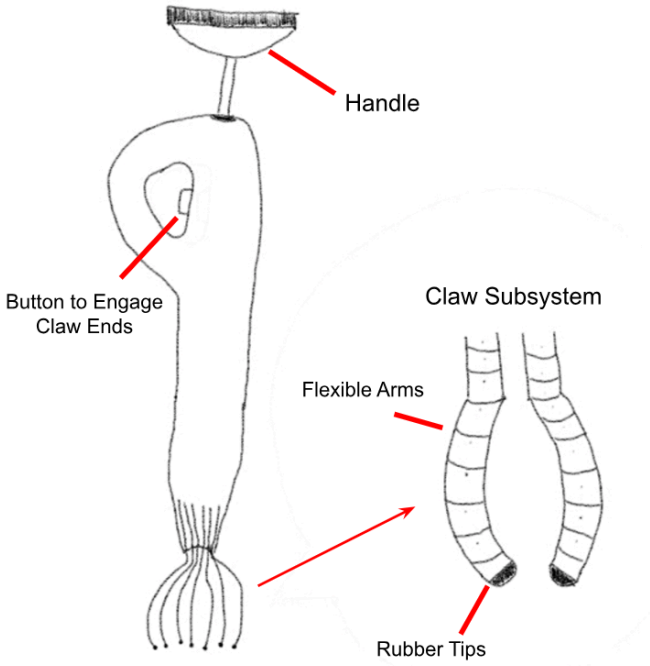

Figure 10. Ideation sketch of the octopus device. The handle is pushed into the device to deploy the claw subsystem out and around a fetal head. To further engage (or disengage) the device, a button can be pressed to allow the flexible arms to tighten inwards, and gain better traction of the fetus. The rubber tips increase the safety of the device and prevent scrapes and sharp edges.

This octopus device sketch was still in the early stages of development with design parameters and materials being considered. Some key areas that our team worked on include the

force distribution around varying fetal head sizes and ensuring the device can fit a range of patients and fetuses, as well as material selection to allow the device to be reusable for low cost settings. These analyses are outlined in the *Current Design Analysis* section of *Engineering Analysis (pgs. 35-39)*. To determine the claw shape to ensure a distributed force around the fetal head, our team performed literature analysis and research on the average size of newborn heads. These dimensions include the craniofacial height, or the height from the crown to the chin, and the head breadth, or the length from the nose to the back of the head. From these dimensions, we calculated the arc length of the fetal head near birth, and therefore, the length of our claw mechanism. Material selection was determined through literature analysis on the biocompatible materials for medical use. These are two examples of engineering analysis that were performed to help develop this octopus device into a functional prototype that meets our highest priorities. Other engineering analysis included the relationship behind the force of the claws to the force of the mechanism the user will operate and the relationship behind the traction force on the fetus to the operator's pulling force. The current selected design addresses the priority requirements that were given through feedback from our sponsor, which are utilization of a pulling mechanism on the fetus and reducing training requirements for operators of the device. In addition, the octopus device uses a distributed force around the fetal head, increasing safety to the fetus. The reliability of our device can be partially determined through the material engineering analysis. In addition, there are other high priority specifications that our team performed engineering analysis on, but through these preliminary theoretical analysis and steps for future analysis laid out, our team decided to continue to improve on this design as our device design of choice. With further design iterations, prototyping, and verification, we were confident that the octopus device would be a user friendly, safe, and low cost AVD device for LMICs.

Problem Domain Analysis and Reflection

Throughout the course of this project, we dealt with many different aspects of engineering as a whole. This section outlines all the possible engineering domains that our problem could cover, including some we did not need for our chosen design. The different problem domains that we anticipated having to deal with were statics, biomechanics, and material analysis, with the possibility of fluids and electrical circuits and systems as well.

The first of these major engineering fundamentals that we may have to address is statics and mechanics, particularly with how forces will be applied through our device. Using statics we can determine how the input forces from the user will translate and be amplified into output forces that are felt by the fetus and the birthing patient. With analyses of these forces, we can determine how to design the device to ensure that only forces that are safe for patients are applied, for instance, less than 200 N of traction force applied to the fetus [21]. This can be implemented through making the device a certain size, giving it a specific geometry, or by putting a safety or stopper on the device so that the force gets maxed out before reaching dangerous levels.

Biomechanics would also carry a large influence on how our device interacts with the patients. An understanding of biomechanics would help us in predicting how both the birthing patient's and the fetus's bodies would react to forces applied by the device, so that we could ensure that none of the forces applied would have any possible unseen effects. In addition to this, general biomechanics of birth would help us to know what magnitude of forces are applied where during the process of childbirth. This is because it would be helpful to have the assisted childbirth be carried out in a way that is similar to unassisted vaginal delivery, so that we can try to remove the fetus in a way that the birthing patient's body is built for instead of trying to take the fetus out in a completely foreign way.

While it may be out of scope for our design this semester, material analysis would be a good thing to keep in mind as the project progresses. Material analysis would tell us how different materials could be used for our device and assist us in picking the right types of material. One of the more important specifications that material analysis would help with is making sure the device is durable to withstand enough use-cycles while avoiding both mechanical failure and degradation from sterilization. This means that device would have to be strong enough to resist deformation while in use, and resistant enough to not break down from whatever it comes into contact with during the birthing and sterilization process. The final design for the device would also have to meet ISO 10993 standards for biocompatibility, meaning that the materials would have to be safe for contact with the patients, even if it were to break while in use [41].

In addition to the device being safe while in use, we also want the device to be easy for the hospital to handle when it comes to disposal. This means that the device would need to at least be able to be thrown out using the Ghana Standard Disposal methods for medical waste. To account for this, we would need to make sure that materials are chosen so that the hospitals can follow these proper guidelines, as well as make sure that the device is not structured in a way that would prevent it from being disposed of using these normal methods.

Fluid mechanics is an engineering fundamental that may have to be addressed depending on the design of the device. There is a possibility that the device may use some sort of suction, in which we will need to be able to safely and securely apply suction to the fetus. For this we would have to take into account the area over which the force would be applied so that the pressure remains at a safe level for the fetus, not exceeding 150 kPa [23].

Another engineering domain that may not have to be addressed based on the final design of the device is electrical circuits and systems. Ideally our device will be purely mechanical, but there is a possibility that we may integrate power components into the system. If this were to be the case, we would want to be able to analyze how much power the device would need to run. We could use that information along with the knowledge of how long it would need to run for to design it to be able to be used for multiple births, and then give it a power supply capable of delivering the required power for the duration of time needed. This would mean that we would have to be able to accommodate how much charge the device could hold, or allow for batteries to be put into the device.

Engineering Analysis

First Design Analysis

For our first selected design, our initial analysis focused on four main problems. It should be noted that some of the analysis mentioned was completed using rough estimates, and not iterated on further as we began to move away from our first selected design before completing analysis. The first problem we addressed was device geometry. We looked at both fundal height [49] and abdominal circumference [50] to come up with measurements, ensuring that the device would fit the large majority of pregnant bellies.

The next problem analysis we conducted was in relation to tube inflation speed. Based on the geometry we came up with we were able to determine the volume of air that the larger tubes could hold. Then, using a blood pressure cuff pump for reference, we calculated how many pumps it would require to fill the largest tubes. After this, we began to consider what type of pump would work best for our design, since faster inflation means the birthing process is completed faster.

Third, we analyzed how the pressure inside of the tubes translates to a force applied to the fetus. To estimate this, we used the safe amount of traction force that can be applied to a fetus [22], alongside a projected contact area based on the device geometry. With these ideal numbers, we related the force and pressure to determine the pressure needed in the tube.

Lastly, we looked at the force that the fastening device would need to have in order for the device to remain secure while in use. Based on the chosen geometry for the fastening device and the properties of a Velcro brand hook and loop [52], we calculated how much force would be required to separate velcro. Using the lowest closure strength we found that the device would not be at risk of separating while in use, as the force to separate it is greater than the force applied by the device. These calculations and those previously mentioned in this paragraph can be found in *First Design* in *Appendix B: Engineering Analysis Calculations (pg. 77)*.

Recently, however, by recommendation of our sponsors [3], we have decided to move on from the belt design, opting instead for the octopus device. As a result of this recent switch, we have not yet been able to perform any analysis for the new device, but we hope to begin initial analysis as soon as possible.

Current Design Analysis

To develop our current selected design further, we performed engineering analysis on multiple subsystems to determine what properties the device should have, and what exactly it should look like. We performed engineering analysis by looking at the materials we plan to use, the number and sizing of the prongs, and two different springs for safety mechanisms. Numerical calculations can be found more in depth in *Current Design* in *Appendix B: Engineering Analysis Calculations (pgs. 77&78)*.

We first looked at the materials that we wanted to use, for both the prototype we are planning to build and the final design. The main parts of the build that need specific materials are

the body (which includes the cone, main tube, and handle), the claw prongs, the tips, and the cord. Each of these parts has specific characteristics that need to be considered, and all final design materials need to be sterilizable and biocompatible. First we looked at the body of the device. This needed to be strong, having a high tensile strength, as it would have to withstand a large amount of pulling during the birthing process. For the prototype we used Polylactic Acid (PLA) and originally planned to use it for the final build as well. However, PLA's mechanical strength tends to be compromised by the sterilization processes, such as a steam autoclave sterilization, so we decided that would not be the best fit for the final design since we have another specification in regards to reusability [53]. To substitute PLA, Polyamide 12 (PA12) was selected since its mechanical properties are not affected after a steam sterilization if properly dried afterwards, as in zero water content after sterilization [54]. PA12 can also be 3D printed, has a relatively high tensile strength, and is biocompatible [55]. Then we looked at the claw prongs. These mainly needed to be flexible and have a high tensile strength. Since the claw prongs will be thin, or around 3 to 4 mm in thickness, we needed a metal that would not be brittle. For the prototype, we decided to use aluminum because of its flexibility, high tensile strength [56], and because it is easy for us to obtain. For the final design we settled on 304 stainless steel [57] due to its properties that are similar to aluminum, but more desirable, including an increased tensile strength and biocompatibility [58]. Next, we looked at the claw prong tips. Prong tips are a necessary part of the device because they protect the fetus from potential scratches and sharp edges from the claw prongs. Additionally, the tips have a low coefficient of friction, allowing for easier insertion of the device. We selected PLA for the prototype so that the tips could be 3D printed, and selected nylon for the final design because of its strength, durability, low coefficient of friction, and biocompatibility [59,60]. For the last material selection, we looked at the device's cord. We decided that the prototype and final design should use the same material because the cord interacts with a drawstring mechanism, and we didn't want to have to design two different drawstring mechanisms to account for the difference in material properties. The criteria for the cord were that it should be inelastic, nonabsorbent, flexible, have a high tensile strength, and be biocompatible, and we selected a polyester material [61].

Second, engineering analysis was performed to determine how the prongs should be designed. The first part of claw prong design we discussed was the number of prongs. We wanted to use a number of prongs that would give a secure grip on the fetal head while also avoiding facial features such as the mouth, nose, eyes, and ears. *Figure 11 (pg. 37)* shows how this was mapped.

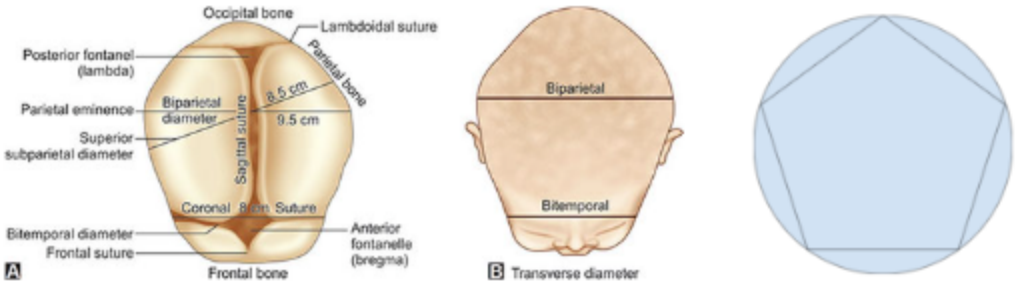

Figure 11. The points of the pentagon show where the claw prongs would contact the fetal head while avoiding fetal facial features seen on the left [62].

When viewing the fetal head from above, the pentagon shape allows for 5 evenly spaced contact points on the head that avoid the sensitive facial features, so we decided on 5 prongs. For the second part of prong design we look at the size that the prongs should be. We took the maximum pressure and force as defined by our requirements and specifications along with the number of prongs being used, and used them to determine the area of each prong, which was 266 mm^2. We assumed there was a square contact area so that we could determine the width, and then slightly increased the width to allow for proper force application, which gave us a width of 20 mm for each prong. The third part of the claw prong design looked into the length of the prongs. We assumed that a fetus head was in the shape of an ellipse, and used the craniofacial height (11.67 cm) along with the head breadth (9.095 cm) from black males and females at approximately 39 weeks of gestational age [63] to determine what the circumference of the ellipse would be. This result was then halved and used with the equation for ellipse circumference (*Equation 1*)

$$C \approx \pi(a + b)\left(3\frac{(a-b)^2}{(a+b)^2\left(\sqrt{-3\frac{(a-b)^2}{(a+b)^2}+4}+10\right)} + 1\right) \quad (1)$$

where a is half the head breadth and b is half the craniofacial height. This number was cut in half to get half the circumference of an ellipse the size of a fetal head, which will serve as the length of our claw prongs. This is a good estimation of the prong length because it accounts for the bending of the prongs around the fetal head.

The square contact area assumption was made because the contact length comes from the size of the fetal head, and we wanted to find a minimum width that would allow for enough force to be applied to aid the birthing process. A possible limitation of this is that the material might not flex in that way we want it to, applying less force than predicted. However, increasing the width of each prong should make up for this imperfect contact, allowing the device to apply more force than is required. Because of this, we believe that the imperfect contact will not be an issue and the device will not fail in assisting delivery due to a lack of force.

Another part of engineering analysis that we looked at was the spring for the drawstring mechanism. This analysis was performed so that the device would be able to remain secure around the fetal head while in use, while also not exceeding safe levels of pressure. To begin this we had to find the force exerted by the string while the device was applied. We found the force in

the string using the pressure applied and the area that the pressure was applied over. We made the ideal assumption that the only contact would be between the device's prongs and the fetal head, and the pressure used came from our requirements and specifications [23], and used the following equation (*Equation 2*).

$$F = PA \tag{2}$$

F is the force, P is pressure, and A is the area the pressure is over. The force found was 300 N, which was then inserted into the friction force equation, along with the coefficient of friction between polyester and plastic, the materials of the string and the drawstring mechanism that the string will be in contact with, which is 0.4 [64]. Using *Equation 3*

$$F_f = \mu N \tag{3}$$

where F_f is the friction force, μ is the coefficient of friction, and N is the normal force. Solving for N gives us the normal force that the drawstring mechanism would have to exert on the string to keep it in place while the maximum pressure is being applied to the fetal head, 750 N. These forces are shown in a free body diagram in *Figure 12*.

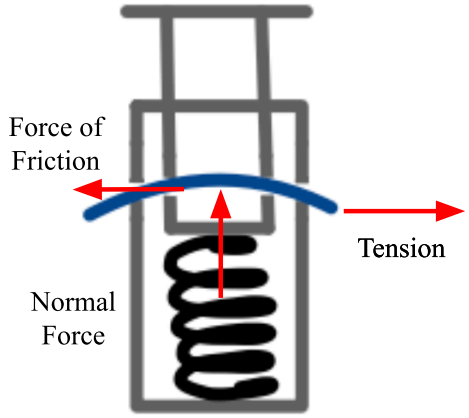

Figure 12. Forces exerted on the string in the drawstring mechanism.

We then looked through McMaster Carr to find a compression spring that could apply this force while taking up only a small amount of space on the device. We selected a spring with a spring rate of 77,500 N/m, and used Hooke's law to find how much the spring would need to be compressed to apply the appropriate force to keep the string in place, which was 9.67 mm of compression. Hooke's law is provided below (*Equation 4*)

$$F = kx \tag{4}$$

where F is the force, k is the spring rate, and x is the displacement. Upon testing, we discovered this was too difficult. Returning to McMaster Carr we found a spring with a spring rate of 3,470 N/m. Since the rest of the mechanism was the same, we used the same displacement to determine that this would apply 33.6 N of force to the string, which still satisfies our specification. This drawstring mechanism will also be able to act as a safety device, because if the pressure exceeds the safe amount, the force in the string will increase, meaning that more normal force would be required to hold it in place. Since the normal force exerted by the drawstring mechanism will remain constant, the string would be able to slip through the mechanism until it returns to a safe level of pressure again, ensuring that pressures that are too high are not maintained on the fetus.

One limitation of this method chosen, and the assumptions that were made in the calculations, is that it does not account for the friction force of the string inside the device before the drawstring mechanism. This means that the force could be different than what we calculated, which could change how much pressure can be applied. In spite of this, we have confidence that the device will not apply too much pressure since the spring was changed, and the device only delivers a fraction of the safe amount of force, and therefore pressure.

Lastly, for the traction force safety mechanism, we had to determine what spring to use. We wanted an extension spring from McMaster Carr that would not move until the device was close to 200 N of force, which is the safe amount of force that can be applied to a fetus' head [22]. Looking through available springs, one was found with characteristics of a minimum load of 193.7 N and a spring rate of 13,300 N/m. To determine if this was satisfactory, and also decide on where to place the warning that a safe traction force is being exceeded, we found the spring displacement at 200 N. Using Hooke's Law, the displacement was calculated to be 15 mm. This was acceptable because we do not want the device to expand too much during the process, as excessive expansion of the device could be inconvenient for the operator.

One piece of engineering analysis that we would hope to complete with more time is the addition of a bead, or a crimped section, onto the string that runs through the drawstring mechanism. This would act as another safety mechanism, preventing the device from being overtightened on a fetal head that is on the smaller side. The analysis performed would tell us where on the string the bead would be placed, and would ensure that there is not a dangerous amount of contact force between the ends of the claw prongs and the fetus' neck if the fetal head is too small. One issue that we found is that while this does give a warning, it does not actually limit the amount of traction force, so it does not meet our safety specification. The redesign for this is discussed in the recommendation section.

More testing that could be done with more time is seeing the largest head size that could be used with this design. While the small fetal heads run the risk of getting poked or jabbed by the claw prongs, large heads have the issue where the device might not be able to be properly tightened, making the device unusable. This could be tested by using the prototype on different size balls or model heads, and seeing what size heads the device could work with before it loses the ability to grip them and apply the proper amount of force.

Build Design

The build design is a claw-based design where, when the handle is pushed into the outer tube, the claw prongs deploy outside on the other side of the outer tube. The claw prongs can then enclose around a fetal head through the pulling of a string that is looped through the bottom of the claw prongs and passes through the claw prong tips. The string goes around the tips and is threaded up through the device, emerging at the drawstring opening in the drawstring subsystem. Once the string is pulled and pressure is applied around the fetal head, the operator can pull on the handle, which engages the traction force subsystem, to assist in the fetal delivery process. An

outside view with the claw prongs retracted and a section view of the claw prongs can be seen in *Figure 13* along with identification of the subsystems.

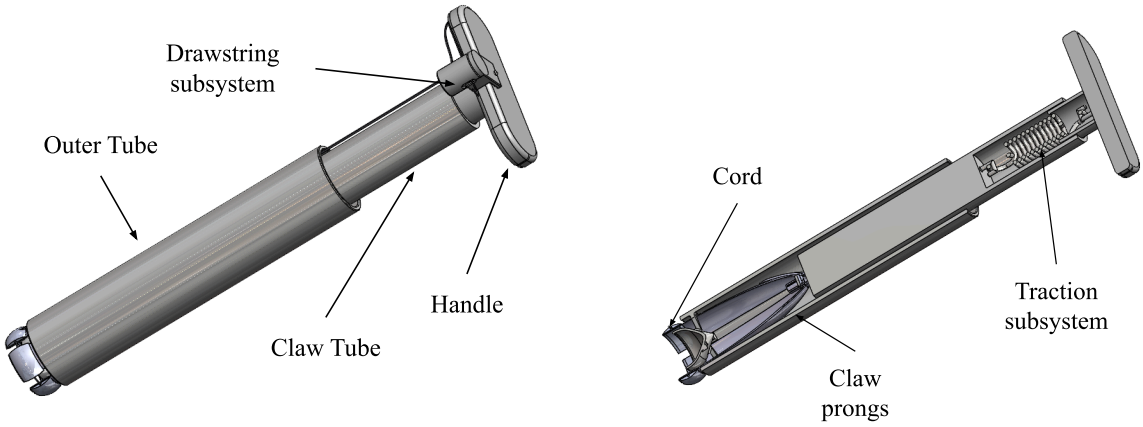

Figure 13. Both images display our claw based design. On the left is an outside view of the device pointing out the drawstring subsystem by the handle. On the right a cross sectional view that displays a better view of the handle and reveals the traction force subsystem.

The outer tube protects the claw prongs when the device is stored or not in use and has a cup attachment at the bottom, which will be placed onto the fetal scalp to provide stability when ejecting the claw prongs around the fetal head. The cup diameter is 50mm which is used to guide placement of the device around the fetal head. The diameter of the tube is 80 mm, designed to be no larger than 10 cm which is the maximum cervix size during the peak of second stage labor, and the length is 375 mm, which along with the cup diameter, is based on the length of a clinically similar device used in comparable situations [13]. A closer look at the outer tube can be seen in *Figure 14*.

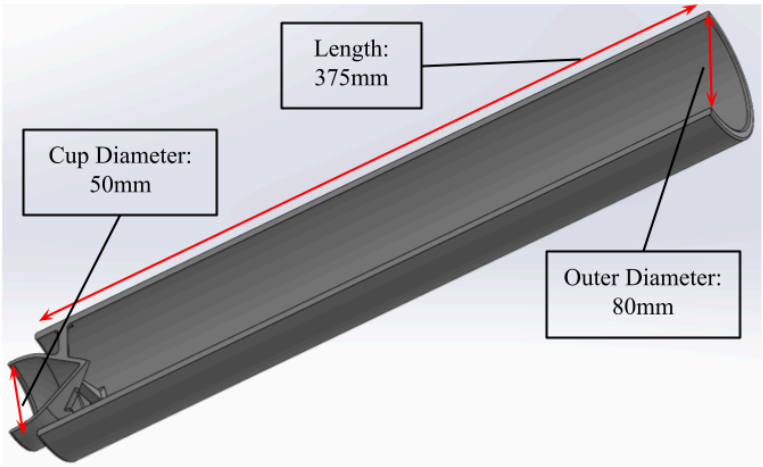

Figure 14. This image displays solely the outer tube of the claw design, which has the cup built into it, with its dimensions listed.

When looking inside the outer tube, there is the handle and the claw. The claw prongs' thickness is 1.016 mm, which does not exceed the thickness of obstetrical forceps currently used for insertion into the pregnant patient [65]. The claw arc length was determined using the

average craniofacial height and average head breadth, as described in the engineering analysis, resulting in an arc length of 163 mm for the claw prong. This is the length that will need to be ejected from the outer tube to fit around the fetal head. Once accounting for the entire length of the claw prong, including the sections inside the outer tube, the prong length comes out to be 213 mm. The string will be placed 12.7 mm above the end of the claw tips to ensure that when the string is pulled to close the claw opening, it is not targeted to enclose around the neck or nose but instead around the chin area. It should be noted that pulling the string and closing the claw prongs opening, which results in complete contact between the fetal head and the claw prongs, will keep the fetal chin tucked to the neck and will therefore not interfere with the flexion stage of the cardinal movements of labor [66]. As previously stated in the engineering analysis, there are five claw prongs which are designed to avoid facial features and each prong has a surface area of 266 mm^2. The device can reach a pressure of 150 kPa as an upper bound but it is not expected that this pressure will be reached often since this is considered an extreme case. The design incorporates a margin of safety to ensure the device can accommodate higher pressures if needed. A closer look at the claw can be seen in *Figure 15a&b*.

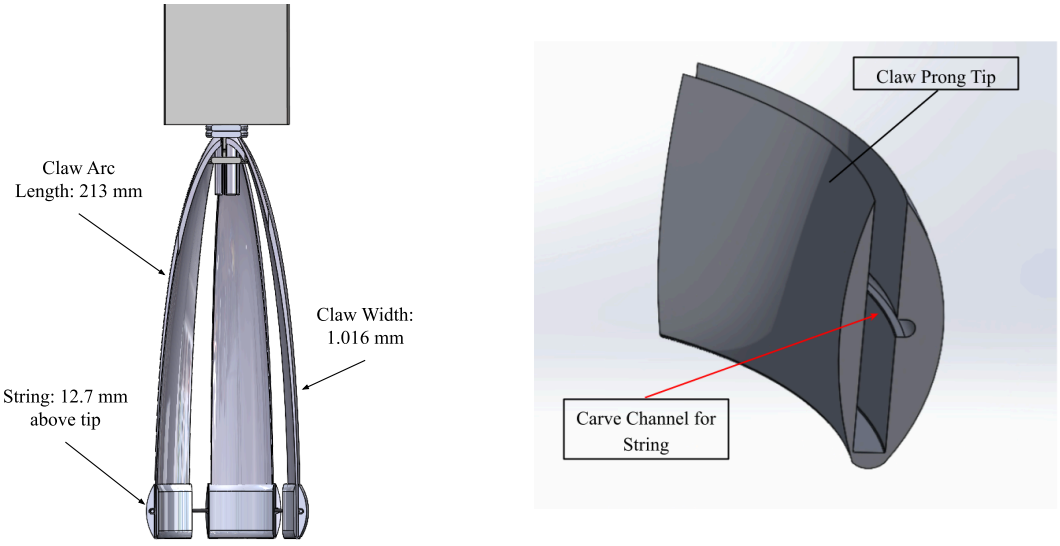

a. b.

Figure 15a&b. *a* shows a closer cross sectional view of the claw. Each claw prong has an arc length of 213 mm, width of 1.016 mm, and the string is looped around the claw prongs 12.7mm above the end of the claw prongs. *b* is the claw prong tip which would slide onto the bottom of the claw prong through the top opening. Additionally, there is a built-in channel for the string to pass through.

Looking closer at the claw and handle, the 5 prongs are evenly spaced and stabilized through a connector piece that will be 3D printed using PLA. The claw prongs are designed to slide into the connector by sliding in the claw prong hook wall and will be flush against the connector. To finish attaching the claw to the handle, a shoulder screw will secure the connector to the handle, as shown in *Figure 16 (pg. 42)*

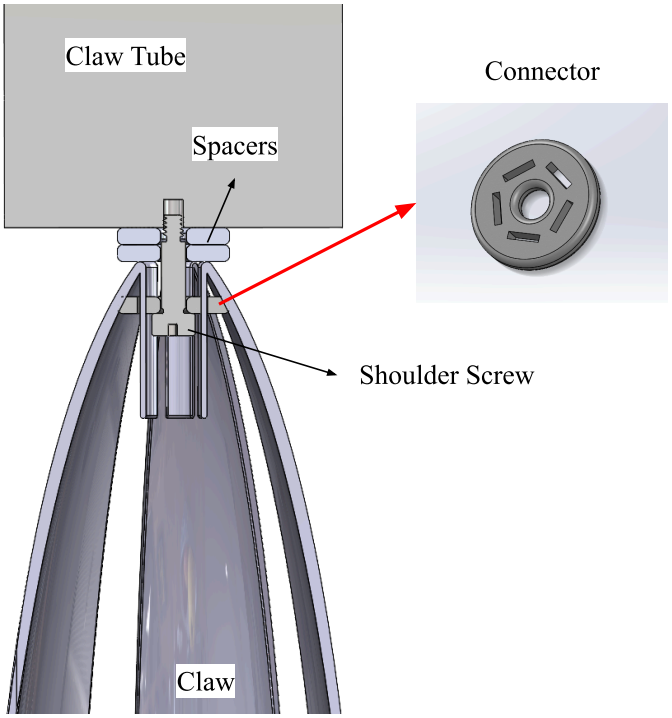

Figure 16. Pictured above is a cross sectional view at the joining of the claw and the handle tube. There are 5 slots in the connector for the 5 claw prongs to slide into. The connector is then connected to the handle tube using the shoulder screw. Spacers are placed for additional tolerance needs based on the manufacturing of the devices' parts.

Taking a closer look at the top of the handle and at one of the two subsystems within the claw device, the traction force subsystem is operated by the handle. A force of about 200 N is not wanted on the fetal head, which is why an extension spring with a minimum spring load of 193.7 N was chosen. For operator visualization, if a force close to 200 N is applied, a red zone will appear from the displacement of the handle outside the outer tube, meaning the red zone becomes visible because the handle is being pulled so hard it comes out of the outer tube. However, this indicator is insufficient to ensure a safe operation due to a lack in a true fail-safe mechanism for the traction force subsystem. More details are outlined in the *Design Critique* section on ways to combat this limitation. The distance to displace the handle from its resting position was determined in engineering analysis to be 15 mm for safety and can be seen in *Figure 17 (pg. 43)*.

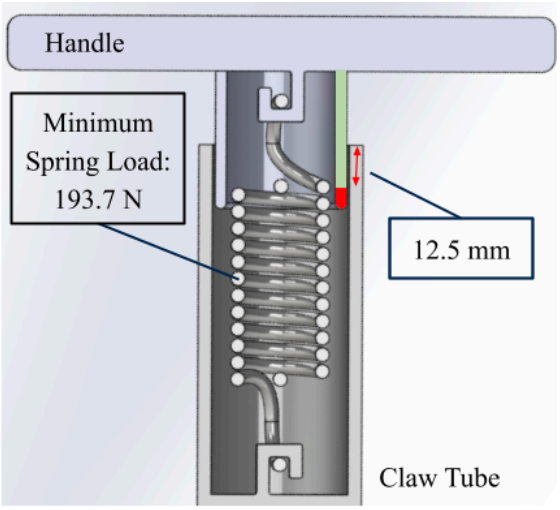

Figure 17. This is a closer look to the traction subsystem. The green coloring on the outer tube signifies that the pulling force on the handle has not exceeded 200 N. Once the red part is revealed and passes beyond the outer tube layer, it indicates that a pulling force of 200 N has been exceeded. The attachment of the spring to the handle can also be seen, by hooking the loops of the spring into place.

For pressure applied to the fetal head, the drawstring subsystem is on the exterior of the handle and attached by a screw. The way it works is that to open the string opening, you need to press up, the compression spring inside increases the opening to pull the string, then releasing will close the opening and lock the string into place. The compression spring for this subsystem has a spring constant of 3.47 N/mm, determined in engineering analysis to prevent pressures higher than 150 kPa from being applied to the fetal head. This is well under the spring constant analyzed to be no greater than 77.5 N/mm. As mentioned in the engineering analysis, the spring is compressed to 9.67 mm so that it can withstand the friction force from the string when applying 150 kPa. However, if a greater pressure is applied, the resulting increase in normal force will exceed what the spring can tolerate at this compression, causing the string to slip. This analysis was performed for the greater spring constant compression spring. For easier usability, a lower spring constant compression spring of 3.47 N/mm was chosen, which does not apply greater than 150 kPa of force to the fetal head. However, there could be some potential downfalls with needing enough pressure to pull the fetus out, detailed in the *Verification* section of this report. The drawstring subsystem can be seen in *Figure 18 (pg. 44)*.

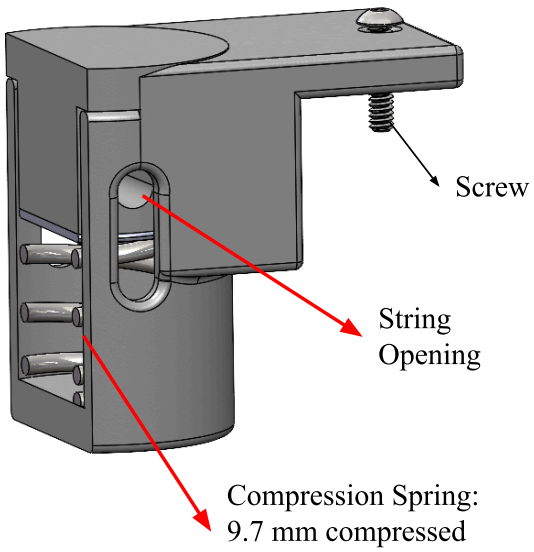

Figure 18. This is a close look at the drawstring subsystem. The compressed spring can be compressed further to make the string opening larger and when it is at rest in the device, it is compressed to 9.7mm which will create a normal force that allows the string to slip for pressure applied above 150 kPa.

Stepping back to the overall build design, the outer tube, claw tube, handle, and drawstring components will be 3D printed using PLA, and the compression spring will be made of 302 stainless steel. The screw will be 18-8 stainless steel, of which all the materials listed are biocompatible and sterilizable and meet ISO 10993 standards. The claw prongs will be water-jetted and bent from 6061 aluminum sheets, the shoulder screw will use black oxide alloy steel, and the extension spring will be music wire steel. These materials are not biocompatible but will be used just for the build design and building the first prototype. From the CAD build design, the volume of the device is 0.0017 mm^3 and the mass with these materials is 2.24 kg, which meets our specifications for the requirement of being easily portable.

Final Design

The materials used for our prototype in our build design were chosen to reduce costs and material acquisition time for the scope of the ME 450 semester timeline. The final design materials are different to fit our lowest priority specification under “materials are safe for humans” with the specification meeting ISO 10993 standards for biocompatibility. This is because in order for our device to be marketed, the materials must meet the ISO 10993 standards [41]. The differences in material selection for our build design and our final design are presented in *Figure 19a&b (pg. 45)*.

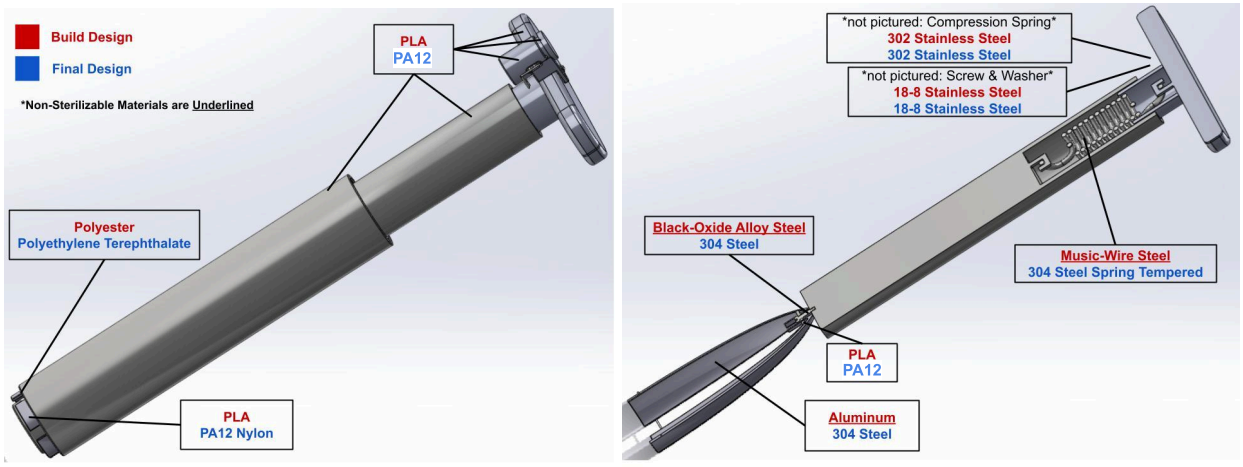

a. b.

Figure 19a&b. Material selection for our build design versus our final design, shown on a CAD model of our build design. The red words represent our material selection for our build design prototype, the blue words represent our materials selection for our final design, and the underlined words represent non-sterilizable materials as defined by ISO 10993 standards. Some build design materials meet the ISO 10993 standards, are biocompatible and sterilizable, and are therefore not changed in our final design.

Our specification of meeting ISO 10993 standards for biocompatibility is a low priority for the scope of ME 450. However, it is still important to outline the final design materials of our device to ensure our device will be safe for medical use in the market. The materials chosen for our build design reflect similar material properties to our final design as outlined in our "Engineering Analysis" section. This allows our prototype device to act as similar as possible to what our final device will be manufactured from. A few things to note is PA12 is not inherently biocompatible, however specific medical-grade PA12 formulas have been developed and been evaluated for biocompatibility under ISO 10993 standards. For example PA2201 could be used during the early stage prototyping because of its availability and compatibility with SLS 3D printing. Additionally, we decided that PA12 nylon would be best for the claw tips in the final design of our device. This is because it offers advantages such as a low friction coefficient and more flexibility, which can be helpful for the movement of the claws when deployed and extracted.

Our build design uses 3D printing for all custom parts excluding the claws, which are manufactured using a waterjet. Waterjetting the claws is an effective large-scale manufacturing process due to its high precision and efficiency. However, 3D printing is effective for prototyping our design, and is not efficient for high volume manufacturing. 3D printing can still be used when this device is in the clinical trials stage. Once this device is ready for the market, we recommend that the 3D printed parts, PA12 and PA12 nylon, in our build design switch to a PA12 formula that is suitable for injection molding for our final process due to the high efficiency and reliability of injection molding. One downside to the injection molding process is that the creation of the initial mold can be costly. This is why injection molding should be used once the device has passed clinical trials and is ready to be produced at high volumes.

Some limitations of our final design are the ergonomics of the handle. Within the scope of ME 450, our team will not get to testing the optimal handle shape, size, and position for a medical professional to use. This testing can be done by creating multiple geometries of device handles, having medical professionals hold the device by the handle and use the device on a physical birthing simulator. Then, the participants will fill out a survey with a 5-point Likert scale to assess the ergonomics of each handle design. Using the results from this survey, an optimal handle design can be chosen or created by combining the most optimal handle design characteristics, and implemented into the device. Another limitation of our final design is the visually appealing design. The scope of our project for ME 450 does not allow time for testing and then iterating of visual design based on user and patient perception. This testing can be done similarly to the testing of the ergonomics of the handle. Multiple colors and patterns can be created on the device, and medical professionals can use the device as well as show the device to patients. Both parties will fill out a 5-point Likert survey to determine the optimal design of the device, and have that implemented into the final device design. Finally, a limitation of our final design includes that our device assumes the fetus is correctly rotated in the vaginal canal. Our device will be used on a fetus to aid in delivery only if the fetus is correctly rotated, and that may require knowledge of the operator to determine if using our device is applicable in certain situations. In this case, once it is determined that our device can be used to assist in vaginal delivery, it does not require high medical professional knowledge of an MD or DO to use the device. This includes placing the device in the vaginal canal, deploying the claws, and extracting the device and the fetus, as it will be verified in the build design.

The final design and the build design will differ in material selection and production, which will likely change how each design visually appears slightly. The final design will mechanically function the same as our build design, as detailed in the “Build Design” section. Our team selected materials for our build design that match similar material properties to that of our materials used in our final design. This allows our device to act similarly to the final design, and validates our prototype testing of our build design. Therefore, our build design represents the final design even with the different material selection, and will act mechanically similar to each other.

Verification of Engineering Specifications

For each engineering specification described above in the section *User Requirements and Engineering Specifications (pgs. 14-22)* also has a corresponding verification plan to ensure that the design of our device meets these specifications. The following sections organize the plans in a parallel manner to the aforementioned section (tables organized by priority).

High Priority Specifications

Table 8a-d (pgs. 47-50) presents the verification plans for our high priority engineering specifications. As stated previously, these requirements are critical to the success of our proof of concept. A justification for why parameters of the verification were chosen is also included.

Table 8a. The verification plans and justification for our high priority engineering specifications. The majority were completed, further details in *Appendix C: Verification Plans (pgs. 79-83)*.

User Requirement	Specification	Verification	Justification	Results
Safety of fetus	1.Traction force applied to the fetus does not exceed 200 N	Testing: There is no fail safe for the current and therefore this specification cannot be directly verified. Once a redesign is put into place, use a force gauge to pull on the handle and measure the force needed for the failsafe to initiate.	This verification test will ensure that the failsafe is initiated before hitting the 200 N limit. Testing on a birthing simulator is not necessary as the same test would be performed, there would just be extra elements.	Fail: There is no failsafe to limit the traction force applied by the user. Our design does warn the user when they are approaching the limit. A new theoretical design has been produced to limit.
	2. Compressive pressure around the fetus's head not exceeding 150 kPa	Basic Testing: Use a force gauge to measure the force needed for the cord to slip in the drawing mechanism. Convert this to the amount of compressive pressure around the fetus's head either through calculations.	This verification test will ensure that the failsafe is initiated before hitting the 150 kPa limit. Testing on a birthing simulator is not necessary as the same test would be performed, there would just be extra elements.	Pass: Results of our verification test resulted in a maximum of 129 N of applied force before the string slipped. This is less than the 300 N threshold corresponding to 150 kPa of compressive pressure.
	3. Device shall be able to release pressure or force on the fetus in < 20 s (minimal) or < 3 s (optimal)	Testing: Placing the device on a model fetus head and using a stopwatch/timer to measure the amount of time it takes for our release to release the applied pressure or force. Basic Testing: Measure the amount of time it takes for a user to push down on the drawstring mechanism and slide the string through.	We do not need to use a full birthing simulator for this test as the extra elements at play in that scenario should cause little difference in the result we get for the test	Theoretically Pass: Results of our basic verification test was that releasing the drawstring mechanism took up to 9 s. This is less than the 20 s minimum for our minimal specification and therefore passes.

Table 8b. *Table 8a* continued. Our verification plan/justification for high priority specifications.

User Requirement	Specification	Verification	Justification	Results
Easy to Use	1. Operable by a birthing attendant, or clinician of similar training/experience after proper training on the device. Proper training is not defined as it is out of the scope of this course to define a full training plan. Within the course, proper training means detailed explanation of the device and a demonstration of the device being used.	Testing: Making sure 10 proxy users, ideally medical students in their 2+ year of training, after "proper training" on the device, are able to perform an assisted vaginal delivery on a birthing simulator.	Our real users will be birthing attendants or midwives who have lesser amount of training than traditional doctors so we assume that by having our proxy users be nursing/medical students of the same school year as these users have level of training, our proxy users will best match the target users. 10 proxy users comes from the constraints of the semester time line and proxy user availability. One study on the use of proxy users for usability testing of medical devices for sub-saharan Africa used pools of 17 and 13 people. The study concluded that proxy users can be used as long as they are carefully selected to best match the target population.	Not Attempted: A full working build was not completed and therefore the testing to verify this specification could not be completed.
	2. Operating the device requires 1 user maximum	Testing: Making sure that it only requires one member of our team to use the device on a simulated delivery.	For this specification testing usability by one person, team members are appropriate testers because this is not about familiarity with the device but rather the ability for one able bodied person to perform all the necessary steps.	Theoretically Fail: Complete verification testing could not be completed (no full working build). When demonstrating the device at the design expo, 1 person supported the device while another pushed down on the drawstring mechanism with 1 hand and pulled the string with the other (3 hands needed > 1 user). Additionally, in an actual scenario where the tube is inserted into the patient, they may be able to do some of the supporting but this may not be comfortable (or safe).

Table 8c. *Table 8a&b* continued. Our verification plan/justification for high priority specifications.

User Requirement	Specification	Verification	Justification	Results
Can be operated without a dependence on external power	1. Device operation lasts at least 1 hour (minimal) before needing to be recharged or is fully mechanical (optimal)	Design: Specification is met and no further verification is needed.	Due to the fully mechanical nature and the fact that the device is fully powered by the end-user, we have met the optimal specification through our design and no further verification is needed.	Pass: The end user provides all power and our design meets this specification and no verification is needed
Adjustable while in use	1. Adjusting the device takes < 2 minute Adjusting is defined as either adjusting the string or the device. Adjusting the string:Unengage the string from its holder, Tighten or loosen the string, Reengage the string with its holder Adjusting the device: Unengage the string from its holder and loosen, Remove the device, Readjust the placement, Insert the device, Tighten and reengage the string with the holder	Testing: Having our team members use the device and using a stopwatch to time the adjustment of our device within a birthing simulator. We could also test on a model fetus, however, the birthing simulator would give the most accurate count. Additionally, if we are able to do it "too fast", because we have used the device many times and people generally get better at things when they do them over and over, we can bring in outside testers	By testing our device in the environment that it will be used, and by appropriately chosen testers, we can ensure good outcomes. Using a simple timer would produce the same results as something more complex.	Not Attempted: A full working build was not completed and therefore the testing to verify this specification could not be completed.

Table 8d. *Table 8a-c* continued. Our verification plan/justification for high priority specifications.

User Requirement	Specification	Verification	Justification	Results
Reliable	1. Device can withstand 20 (minimal) or 2500 (optimal) use cycles without mechanical failure or material degradation from sterilization	Testing: We cannot use testing on our build design for this specification because of the material difference from the final design, If testing this on the final design, we would do a specified number of test rounds (20+) on a birthing simulator (or simulate use on just a model fetus) with sterilization afterwards and ensure the device maintains correct function. Computational: Use S-N curves to figure out the cycles of use based on the load that is measured in previous verification. Research: Look into how sterilization changes the properties of our final design materials and how many cycles they are rated for.	The S-N curves will be able to tell when the materials will mechanically fail, however the interplay of the parts together and the actual material degradation from sterilization could only be modeled through physical testing although research could also be utilized to learn more about material degradation.	Pass: The number of cycles for the most critical (size and function) geometry passes the optimal 2500 use cycles. Using PA12 (weaker than 304 stainless steel), the number of cycles before failure surpasses 10^6. Additionally, sterilization has minimal effects on its properties so it is unlikely to degrade significantly from sterilization.

For the compressive pressure specification within the safety of fetus requirement, the verification test was run 5 times. The highest force measured was used (129 N) and compared against the force associated with 150 kPa of compressive pressure (300 N). Since the highest force measured was less than half the force associated with 150 kPa, the verification passed. Full calculations and the collected data can be found in *Appendix C: Verification Plans and Results Equation C.1 and Table C.3 (pgs. 79&80)*. Included in *Appendix C: Verification Plans and Results Table C.2 (pg. 79)* is a plan to directly measure the compressive pressure that would check our basic verification.

For the release of pressure/force specification within the safety of fetus requirement, the basic verification test was run 11 times with 4 different testers. The longest time measured was used (8.01 s) and compared against our minimal specification (20 s). Since the longest time measured was less than half our minimal specification, the verification passed. It is of note that

the majority of times fell below our optimal specification of 3 s. The collected data can be found in *Appendix C: Verification Plans and Results Table C.5 (pg. 80)*.

For the reliable requirement, the S-N curves of 304 stainless steel and PA12 were examined and the smallest areas manufactured from both materials were compared. For PA12, an area of 19.6 mm^2, located within the hook for the extension spring in the handle (and the claw tube), was taken as the point of interest. Using our upper limit of 200 N, this resulted in a stress of 10.186 MPa. Comparison of the S-N curve for PA12 showed that at 3000 cycles, a stress range of greater than 40 MPa (4 times greater than 10 MPa) could be withstood [67]. Additionally, research into sterilization of PA12 revealed that proper sterilization has minimal effects on material properties and therefore the material is not likely to degrade substantially [54]. 304 stainless steel was also examined and had a 5 mm^2 area of interest (bend geometry of claw prong). Again using 200 N, this resulted in a stress of 40 MPa. The S-N curve for 304 SS was well above 40 MPa until past 10^7 cycles, [68]. Full calculations and the associated graphs can be found in *Appendix C: Verification Plans and Results Equations C.2-C.3 and Figures C.1&C.2 (pgs. 82&83)*.

Appendix C: Verification Plans and Results (pgs. 79-83) also includes detailed plans (information on state of the design, tests required, equipment/users required, and use of key takeaways) for all high priority specifications.

Medium Priority Specifications

Table 9a-d (pgs. 51-54) presents the verification plans for our medium priority engineering specifications. As stated previously, these requirements make sure our proof of concept matches the criteria from devices on the market. A justification for why certain parameters of the verification were chosen is also included.

Table 9a. The verification plans and justification for our medium priority engineering specifications. Some of these verification plans may be completed within the timeline of the semester.

User Requirement	Specification	Verification	Justification	Results
Safety of fetus	1. Pressure/traction force is visually displayed for operator to see	Visual Examination: Have members of our 450 section see if they can identify where the force is displayed within a certain amount of time (15-20 seconds).	In a situation where the force exceeds the safe limit, we want the device to be able to release in < 20 seconds. However, to make sure this release happens within the 30 seconds to avoid injury, we need to make sure that the users can find and assess the visual display within a short amount of time	**Theoretically Pass and Fail: A red indicator line is included in the build design that warns the user when they are approaching the 200 N traction force limit. Pressure force is not displayed but there is a fail safe in place.**

Table 9b. *Table 9a* continued. Our verification plan/justification for medium priority specifications.

User Requirement	Specification	Verification	Justification	Results
Adjustable while in use	1. No more than 5 steps to adjust	Testing: Having our team members use the device and count the steps for adjusting our device within a birthing simulator. We could also test on a model fetus, however, the birthing simulator would give the most accurate count.	Even though the team will be the experts on the device and know how the device works, we want this to be a standardized process so by testing that the process works, we verify this specification.	Theoretically Pass: Adjusting the string will be max 3 steps: Unengage the string from its holder, Tighten or loosen the string, Reengage the string. Adjusting the placement of the device will take max 5 steps: Unengage the string from its holder and loosen, Remove the device, Readjust the placement, Insert the device, Tighten and reengage the string.
Easily portable between wards/floors	1.Total weight <= 7 lbs (3.18 kg) (minimal) or <= 1 lbs (0.45 kg) (optimal)	Virtual: Receive the overall weight (mass) from the CAD model once each part is assigned the correct materials as our build design will consist of materials that are not equivalent to the final design.	The CAD model takes into account the volume of the pieces and then uses the defined densities of the material to calculate the overall weight (mass) of the part and then the design as a whole	Pass: The weight of the final design CAD is 2.31135 kg and the estimated weight of the build design is 1.342 kg. Both are below the minimal specification of 3.18 kg.
	2. Device does not require more than 1 person to transport in a vertical ascent of at least 20 stairs	Testing: Have team members transport the device up the specified amount of stairs.	Our team is composed of members of multiple genders, ages, races, and sizes compromising a good pool of testers.	Not Attempted: Due to time constraints and medium priority.
	3. Device does not require more than 1 person to transport at least 50 m (minimal) or 100 m (optimal)	Testing: Have team members transport the device the specified distance.	Our team is composed of members of multiple genders, ages, races, and sizes compromising a good pool of testers.	Not Attempted: Due to time constraints and medium priority.
	4. Dimensions during transport of the whole system should not exceed 0.03 m^3 (minimal) or 0.02 m^3 (optimal)	Virtual: Inspect the overall measurements in the CAD model and ensure the volume does not exceed the limits Physical: Measure the build design.	The CAD model will reflect the design parameters, measuring the build design will account for incongruities from the build process.	Pass: The volume of the final design CAD is 0.001656 m^3. The build design is the same. Both are below the optimal specification of 0.02 m^3.

Table 9c. *Table 9a&b* continued. Our verification plan/justification for medium priority specifications.

User Requirement	Specification	Verification	Justification	Results
Consistent contact (traction force and pressure) on the fetus	1. User set pressure and traction force shall remain consistent for > 2 min (minimal) or > 5 min (optimal) after application	Testing: Using the device in a birthing simulator during a practice birth or a model fetus, set the device to the "normal pressure and traction forces" and time how long the device can hold them. (Stopping at an upper threshold of 10 minutes)	Physically testing is the main way to verify this specification as it is based on the device's interaction with the fetus.	Not Attempted: A full working build was not completed and therefore the testing to verify this specification could not be completed.
Perceived as medically safe	1. 5-point Likert mean scale score > 3.5 (minimal) or > 4 (optimal) for birthing individuals	Research/Testing: Receiving feedback from at least members of the 450 class or at best patients at the UM Von Voigtlander Women's Hospital. Showing them the device and a quick explanation of its use then having a quick survey about their perception of the device	We may not have access to birthing individuals due to timing or privacy laws, however, we can still get an overall feel for the acceptability of the design by members of our section.	Not Attempted: Due to time constraints, medium priority, and incomplete build design.
Low Cost	1. Purchase price is < $800 (minimal) or < $300 (optimal)	Research/Virtual Design: Using Ansys GRANTA EduPack, or a similar software, to price out the manufacturing cost of the final design and then using that manufacturing is usually 80% of the purchase cost to calculate the purchase price.	The build design will be made out of different materials so the bill of materials will not match the purchase price of the final design. Therefore, using a cost model of the final design CAD is the best idea.	Not Attempted: Due to time constraints and medium priority.

Table 9d. *Table 9a-c* continued. Our verification plan/justification for medium priority specifications.

User Requirement	Specification	Verification	Justification	Results
Easy to set up	1.Setup time is < 10 min (minimal) or < 5 min (optimal)	Testing: 10 proxy users, ideally medical students in their 2+ year of training, within 5-10 minutes, are able to setup and deploy the device on a model fetus head either within or outside a birthing simulator	Our real users will be birthing attendants or midwives who have lesser amount of training than traditional doctors so we assume that by having our proxy users be nursing/medical students of the same school year as these users have level of training, our proxy users will best match the target users. 10 proxy users comes from the constraints of the semester time line and proxy user availability. One study on the use of proxy users for usability testing of medical devices for sub-saharan Africa used pools of 17 and 13 people. The study concluded that proxy users can be used as long as they are carefully selected to best match the target population.	Not Attempted: A full working build was not completed and therefore the testing to verify this specification could not be completed.
	2. Setup requires no more than 2 people (minimal) or 1 person (optimal) when they are wearing surgical gloves	Testing: Having our team set up the device while wearing gloves and making sure that it requires the specified amount of people.	This specification is mainly about the feasibility of the setup process with 1 person so our team members should be appropriate test users. Also, physical testing is the main way this specification can be verified.	Not Attempted: A full working build was not completed and therefore the testing to verify this specification could not be completed.
Durable	1. Withstand a fall of 1.5 m (minimal) or 3 m (optimal) without being damaged	Virtual: Simulate drop testing the CAD model of the final design.	The build design will be made out of different materials so physical drop testing will not work, therefore, simulation is our only option until a device with the final materials is built.	Not Attempted: Due to time constraints, medium priority, and lack of durability simulation knowledge.

As stated previously, some of these verification plans may end up being completed during this semester. The likelihood of this happening will depend on the time it takes to verify our high priority specifications first. The specifications that will take precedence if we are able to do more

verifications are #1 in Safety of Fetus, #1 in Adjustable while in use, and #1 in Easily portable between wards/floors. The reasoning for this selection is that these were some of the specifications that were labeled as high priority prior to our re-evaluation during the DR 3 timeline.

Low Priority Specifications

Table 10a&b (pgs. 55&56) presents the verification plans for our low priority engineering specifications. As stated previously, these requirements would be nice to have, but are not critical to the success of our proof of concept. They are, however, critical to the success of our final design and therefore must be outlined. A justification for why certain parameters of the verification were chosen is also included.

Table 10a. The verification plans and justification for our low priority engineering specifications. None of these verification plans will be completed within this semester, however, a general plan is still presented.

User Requirement	Specification	Verification	Justification	Results
Materials are Safe for Humans	1. Materials must meet ISO 10993 standards for biocompatibility. Testing the physical and/or chemical information ensures no cytotoxicity, sensitization, and irritation or intracutaneous reactivity.	Research/Design: Research materials that meet this standard and make sure to incorporate them into the final design on CAD for verifying weight and dimensions. The build design will not meet this specification	This specification will not be verifiable on our build design. However, we should be able to verify that appropriate materials are chosen within our final design.	Theoretically Pass: The materials for our final design are biocompatible as verified through research.
	2. Design has no sharp edges (all radii ≥ 2 mm).	Virtual: Examine the radii in the CAD design to ensure that they are less than the specified amount Physical: Do the finger check on all corners and edges of the build design to ensure that none are sharp	Since the build design will be made of different materials but will be the same design as the final design, both physical and virtual examination will suffice for this verification.	Fail: Some parts of our design have thicknesses smaller than 1 mm and therefore cannot have 2 mm radii. More research will need to be done to see how to mitigate this problem.

Table 10b. *Table 10a* continued. Our verification plan/justification for low priority specifications.

User Requirement	Specification	Verification	Justification	Results
Easy to Service	1. Maximum 4 (minimal) or 2 (optimal) individual parts requiring cleaning/sterilization and reassembly between each use cycle	Testing/Design: Run a test cycle and see how many parts require sterilization and reassembly. It is important to think about this while designing to limit the amount of redesigns needed.	We could try and do this validation purely through CAD and designing; however, by running a test cycle and seeing which parts of the design interact with what, we can fully assess what will have to be sterilized and how the device will have to be taken apart.	Not Attempted: Due to low priority. However, ideally every material would be sterilizable and therefore the entire device could be put into an autoclave without having to reassemble any components.
	2. Fasteners are standard metric sizes.	Research/Design: Find standard metric sizes that are available in Ghana and make sure to incorporate these into our design	This specification can be easily verified through ensuring that all the fasteners in the CAD model for the final design are standard metric sizes that will be readily available.	Pass: All fasteners in the CAD are metric sized. Either 4-40 and 8-32 threads.
	3. Can be 100% serviced by biomedical engineers with prior knowledge of maintaining and fixing medical devices (minimal) or by reading the instruction manual and does not require a prior background knowledge in maintenance (optimal)	Testing: Have biomedical professors or senior students examine the device and manual and respond to how they would fix the device if certain situations arose	A biomedical professor would be the closest we have to a biomedical engineer that works at the hospital and therefore the best proxy for this verification. Having a scenario style allows us to keep our design intact and still receive proper feedback and verification.	Not Attempted: A full working build was not completed and therefore the testing to verify this specification could not be completed.
End of Life Disposability	1. Device follows Ghana Standard Disposal methods for medical waste (minimal) or can be reused/recycled (optimally)	Research: Look into the methods for waste disposal and ensure proper material choices. Potentially talk to someone at KBTH or KATH that manages the waste and get their approval/design feedback.	Since the build design will be made of different materials from the final design, and since disposing of our design is not an option as we need it for other tests and for the design expo, the main way of verifying this specification is to do the proper research to inform our final design material choices	Not Attempted: Due to time constraints and low priority. Materials for final design were chosen for biocompatibility and sterilizability rather than disposability.

As stated previously, none of these verification plans will be completed within this semester, however, a general plan is presented for future reference.

Validation of Final Design

For validating that our final design solves the design problem, we identified 5 questions and assumptions that would need to be answered. The following table, *Table 11a&b (pgs. 57&58)*, outlines these questions/assumptions, states the timeline on which they would be completed, and lays out a general plan.

Table 11a. The validation plans for our final design. None were completed during the semester.

Question/Assumption	Validation	Timeline
User and patient satisfaction of the AVD device.	Present the device to OBGYN staff at University of Michigan Medicine (a group of 20-30 total) and get their general feedback on the design and more feedback once they are able to use it on a birthing simulator. Similarly, select a group of birthing patients (a group of 30 total) to view our product. Show the birthing patients a demonstration of our device on a birthing simulation. After the demonstration, we will gather feedback and use the likert scale for comfortability/happiness rating to determine the success of this trial.	A full CAD or prototype of the build design would be needed so people can interact with it. Due to lack of a full working build and time constraint, this was not attempted during the semester.
Regulatory Compliance with AVD device clinical trials.	Identify the tests that will be completed in these clinical trials. Since we are designing for LMIC, specifically Ghana, we will identify the test required by the Ghana Food and Drugs Authority. Then conduct these tests on our device if possible. Make sure that the number of tests that the device passes matches the regulatory standards.	In the future. A fully manufactured final design is required as this is the one that will be tested under clinical circumstances.
Will our device be more successful in reducing AVD failures than the other devices?	Recruit participants who have used competing products (MD/DO and some midwives). Have them use both products and complete a feedback form to compare the usability of our device with competing devices. This could also be a longer more thorough validation which involved a full trial and research using the different devices and comparing the failure rates of each when tested in specific scenarios or randomly sampled scenarios.	In the future. Usability feedback would require either the build or final design being built. A full trial and research would require a full final design being built.
Does our AVD device require less training then current AVD devices?	Once the training plan is completed (How the device will be taught in class, simulation training, and simulation final testing to ensure competency), compare this plan to others for the vacuum and forceps techniques based on timing (probably average) to complete, prior knowledge before starting, and level of medical professional authorized to complete the procedure.	In the future. The training plan would need to be complete before this validation could be completed.

Table 11b. *Table 11a* continued. Our validation plans for our final design.

Question/Assumption	Validation	Timeline
Is our AVD device easily integrable to the current systems at the hospital?	Run at least one (maximum 5) trial days at a hospital where the device is proxied, being retrieved, setup, used, sterilized, and stored. Receive feedback (in questionnaire form) from hospital staff (users, nurses, and other people who interact or are affected by the device) on the feasibility of successfully integrating the device into the current systems.	In the future. A prototype of the build design would be acceptable but a fully manufactured final design would be better. Additionally, multiple dedicated days shadowing at the hospital would be necessary and that does not work with any of our team member's schedules this semester.

The majority of these validation plans require a state of the device or information that was not achieved during the semester. *Appendix D: Validation Plans (pgs. 84&85)* includes a more thorough plan for "User and patient satisfaction of the AVD device", draft questionnaires/surveys for feedback on "User and patient satisfaction of the AVD device", and a further explanation of some tests needed for "Regulatory Compliance with AVD device clinical trials".

Discussion

Now that we are finished with the design process for this semester, we acknowledge the shortcomings and potential improvements that can be/could have been made to our design process and final design. This section will give a critique and discussion of our design and design process focusing on problem definition, design, and risks. Recommendations on which of these critiques should be focused on will be discussed in the *Recommendations* section (*pgs. 65&66*).

Problem Definition

While our team partook in a problem definition and background information collection phase at the beginning, and continued to learn more about our problem throughout the semester, there are still more questions and topics that we would explore further. The first of these is learning more about the biomechanics of birth. Our group members had little experience with this topic and a further exploration could have helped make better informed design decisions. To facilitate this learning, we would meet with a librarian to recommend literature surrounding the topic. Additionally, we could meet with a doctor, or other medical professional, who could provide explanations and demonstrations. A medical professional with experience using existing AVD devices would be particularly helpful as they could show us how those AVD devices mimic a natural birth or at the least, assist it.

Another topic to explore would be collecting more information about failed AVD device designs and answering the question of why they failed. We found a few patents and articles

detailing these designs but little information on why they failed. Having a comprehensive list of designs not to make could have helped us during the concept generation process. We would meet with a librarian who could point us in the right direction for finding patents and workshop keywords to use for our search. Additionally, we could reach out to other researchers (previous 450 teams for example) and pool our knowledge. Research on failed AVD devices could also further inform the question of possible (and safe) methods of removing a fetus from a womb. Concept generation was done surrounding this question and early miscommunication with our sponsor, detailed further in the *Risks* section below, could have been mitigated with further exploration of safe methods for removing a fetus from a womb, not just possible methods.

A question that we explored slightly but our design could have benefited from further exploration is "what are the real improvements people (medical professionals and birthing patients) want in a new AVD device design?". We received information about the negatives of the current AVD device designs (pop-offs, high training, etc.) and what other groups have tried to achieve before leading to our statement of need for a "safe, reusable, and affordable AVD device operable by medical professionals with lesser training, such as midwives". However, this left many technical specifications unknown. To further explore this question, we would consult more (2 were contacted) medical professionals and stakeholders to receive their input. We would ask them about their experience with existing AVD devices, what frustrates them the most when using said devices, and any other improvements they can think of. Once the data is collected, processing and finding the common responses will help narrow down widespread design improvements wanted by the AVD device stakeholder community.

A last question/topic that could have been explored further, for completeness, are the cultural stigmas and worries surrounding birth in LMIC, specifically Ghana. The GHDI report, one of our team member's experiences in Ghana, and discussions with our sponsor and contact in Ghana were the main sources we looked into for this question. Further exploration could include scholarly articles about research studies performed or books written from the perspective of individuals that reside in LMICs. The information learned would be used to identify design decisions that should (or should not) be made during the design process.

Design Critique

Our build/final designs created this semester have strengths (in general and compared to other AVD devices) along with weaknesses that require design modification to fix. Starting with the strengths of our design, the first strength is that our device distributes forces more evenly on the fetal head compared to current AVD devices such as forceps or the vacuum devices. Our device consists of 5 prongs compared to forceps which have 2 and the vacuum devices which have a singular cup. The greater area of our prongs reduces the applied pressures to the fetus. Another strength is that our device is fully mechanical and user powered. The device being independent from an electrical power source lends itself to integration into LMIC hospitals which have electricity outage issues [19]. Additionally our device is easy to transport, which is an important consideration for easy integration into hospital settings. During verification testing,

our device passed 2/4 of the easy to transport specifications with the other 2/4 not attempted. However, our team was easily able to transport the device around the X50 lab and to our expo table so we assume that the other 2 will also pass verification testing once attempted. The last strength of our device is that ideally the steps to follow for applying and adjusting the device are the same meaning that once one is mastered, they both are, making the device easier to learn.

Moving into the weaknesses of our design and subsequent potentials for redesign or modification. The first weakness is that the current design for the claw tips is not large enough to fit over the claw prongs. The claw prongs are 0.04" thick, which is close to 1 mm but actually 0.016 mm over. The current slot in the claw tips is exactly 1 mm and therefore too small. Redesign of the claw tips would include increasing the slot width to 1.016 mm and then adding a second increase (at least 0.01) to account for potential shrinkage and other variability. This is an overall increase of at least 0.026 mm.

As stated in the "Operating the device requires 1 user maximum" specification in *Table 8b (pg. 48)*, the device is not easily operable by one person. One part of this is that the drawstring mechanism is difficult to operate. Currently, one hand is needed to push down the mechanism while the other is used to adjust the string. This leaves no hands for holding/supporting the device. A possible redesign solution would be to rotate the drawstring mechanism 90° on the handle so a user can support the handle and push on the mechanism simultaneously (*Figure 20*).

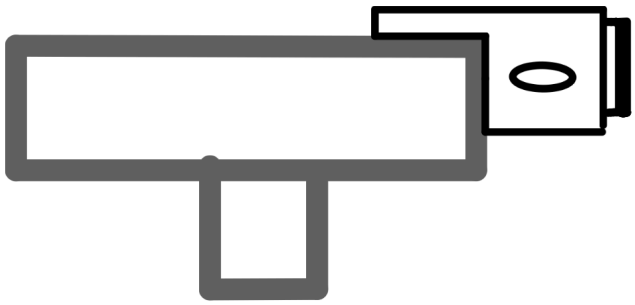

Figure 20. Potential redesign of the positioning of the drawstring mechanism on the handle.

Additionally, the size of the drawstring mechanism was created based on the chosen spring dimensions and is slightly large. To increase usability, one redesign is to reduce the size of the mechanism. A smaller spring with the same properties (spring stiffness) would need to be found to maintain the failsafe for compressive pressure. If a spring is not able to be found that decreases size and maintains the spring stiffness, the friction of the surface that the string interacts with can be increased.

Another part of the device not being easily operable by one person is that the device is long, longer than needed. One easy way to shorten the device is to shorten the tubes to the minimal length. The claw tube must be at least the length of the claw prongs to allow them to fully eject out of the outer tube The length of the claws (bent claw prongs and claw connector) is around 215 mm. The current length of the claw tube is 14.65" (372.11 mm) which means we can safely decrease the length by 120.11 mm leading to a new length of 252 mm (a 37 mm safety length). Additionally, the outer tube must be long enough to house the claws and potentially part

of the claw tube, but cannot be longer than the claw tube length. Currently, the length of the outer tube is 14.72” (373.888 mm), but it can be decreased by 131.888 mm leading to a new length of 242 mm (this includes 27 mm of the claw tube initially inside the outer tube and a 10 mm safety factor on length of the claw tube when ejecting the claws).

An ergonomic weakness of our design is the handle. The design of our current handle is bulky, due to the device designed fully using CAD and made to what we thought would be proportional. To make a more ergonomic and user friendly handle, research can be done on handles of devices that are similar to ours. Additionally, ergonomics and usability testing could be performed to rank design on comfortability and ease of use.

Currently, our traction force safety mechanism (extension spring and red warning) does not meet our specification on limiting applied traction force. We have done some initial redesign with an interior drawstring mechanism, comparable to the drawstring mechanism that limits compressive pressure. This initial redesign is shown in *Figure 21*.

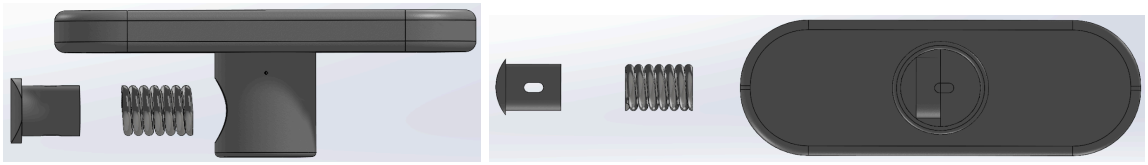

Figure 21. Potential redesign of the tension subsystem failsafe within the handle.

To end the critique of our design, one manufacturing and one overall weakness will be presented. A manufacturing weakness of our design is that without a specific bending instrument (such as a die), the claw prongs were difficult to bend to their curved shape. During our building process, we used the rounded edge of a table, however, a die would make the process easier, more repeatable, and more accurate. An overall weakness is that so far, we have received minimal information on ease of use of our design so far. If more time permitted, we would have gotten feedback (during our validation) or done more verification tests related to specifications on ease of use, set up, etc.

Risks

An initial challenge we faced in the design process was that the majority of our team members had no medical background and had never experienced birth or interacted with current AVD devices. The dedicated time for problem definition and background information collection during the DR 1 timeline was very important to us understanding the topic. Furthermore, two team members had the opportunity to shadow University of Michigan Medicine employees at Von Voigtlander Women's Hospital. Both members experienced a birth and had the opportunity to interact with current AVD devices. After that day, the majority of the team was more knowledgeable in this field and could make more informed design decisions.

One challenge we faced in our design process was our failure to properly clarify our sponsor’s definition of “novelty of the device”. This was a major driver in our first design failure. Due to our assumption of the definition of novelty as not using a pulling force, instead of clarifying with our sponsor that we will have to utilize a pulling force (safest way to assist in

delivery) we had "premature convergence" during our concept generation phase. Our initial concept generation stage did have a few designs that used pulling force. However, after we received feedback that our design would not be safe, we did very minimal secondary concept generation and relied on our initial design space. Since the initial design space was smaller than it could have been, neglecting many designs using a pulling force, we may have excluded the “best” design. During the remainder of the semester, we focused on maintaining clear communication and eliminating unnecessary assumptions to avoid more confusion and failure.

Another challenge related to the failure to clarify novelty was the compressed timeline for redesign that resulted. During the compressed timeline, we had to select a new concept, do initial engineering analysis, as well as focus on the deliverables for DR 2. We mitigated this risk by splitting up the work best we could to ensure it was all completed. We also prioritized getting sponsor/stakeholder feedback on our new designs as soon as they were completed.

A challenge during the manufacturing and building part of the design process was the multiple redesigns of the claw prongs. The first one was out of necessity for manufacturing since the original designed thickness could not bend to the required shape. The second redesign was due to the new aluminum being too flexible and bending in unanticipated ways. Every new iteration required ordering new parts, waiting for shipping, and then manufacturing the final shape. Additionally, new claw tip designs had to be made (and printed) due to the changing thickness of the aluminum bar. All of these steps consumed multiple days and slowed construction of the build design as these parts are integral to putting everything together. We addressed these challenges by ordering the aluminum bar from McMaster-Carr, who usually ships in one day, or using materials from the undergraduate machine shop. These steps helped accelerate the timeline. The main bottleneck was printing the claw tips as this was done by the undergraduate machine shop and usually took a few days. One time, a team member was able to print an iteration on their home printer which reduced the wait time.

Another challenge during the manufacturing and building part of the design process was that the interior hooks that connected the spring to the handle and the claw tube did not print correctly. The CAD design has an additional turn at the end to make a traditional “hook” shape. However, the printed handle and claw tube’s hook was “L” shaped and did not have the aforementioned turn at the end. During construction of the build, we attempted to manage this risk by adhering the spring into the hook to prevent it from sliding off and unassembling. We tried three different adhesion methods, hot glue, epoxy, and super glue. None of the methods stuck and our final build delivered to our sponsor has the spring unattached to either hook.

Our last challenge during the manufacturing and building part of the design process was that our final iteration of claw tips warped during the curing process after printing. This meant that they did not bend around the claw prongs the way we wanted. To mitigate this risk and attach them to the build in time for design expo, we had to use hot glue to both attach the tips to the prongs as well as fill in the extra space. The drawback of this is that the hot glue is not as secure as the super glue we were going to use.

One challenge related to the design of our device was the timeline for receiving feedback that one of our specifications was not met by the current design. We were informed that our design would not meet the specification of limiting the applied traction force to < 200 N without implementing a fail-safe a couple weeks before design expo, when we were focused on finishing the build and testing our design. Redesigning and remanufacturing a critical subsystem of our design was not achievable within that timeline, but a potential solution was created to ideally meet the specification in the future. This challenge is related to the current risks associated with the end-user of our final design. Without the redesign, the end-user is responsible for limiting the applied traction force, a responsibility that can have consequences. Additionally, the end-user is reliant on the fail-safe working for limiting compressive pressure as there is no other display.

Another risk to the end-user of our final design is that the design is fully powered by the end user. Therefore, the user must have sufficient strength to operate the device and when operating the device, may experience undesirable outcomes of exertion. Some examples of these undesirable outcomes are pulled muscles or muscle strain and cramps.

Reflection

Our project is within the scope of the fetal delivery process, so public health, safety, and welfare are all relevant factors. Public health influences whether pregnant patients have access to trained clinicians who can provide proper care and support a safe fetal delivery. The welfare of not only pregnant patients but also doctors and midwives assisting in labor is an important consideration, because even though our goal was to design a device that requires less training, educated and motivated clinicians are still necessary. If these factors are not supported, the device could add stress to the delivery experience and ultimately not be used. Our design solution was based on a need identified in Ghana but was intended to be applicable to other LMICs facing similar challenges, particularly the need for a safe, reusable, and low skill assistive vaginal delivery device. Global context is relevant because this design could improve access to AVD devices in LMICs while also providing an additional option in high income countries, especially as a device that may be easier to teach to medical trainees. In addition to public health, safety, and global considerations, we also evaluated the potential social and economic impacts associated with the device. Potential social impacts in regards to the use and disposal of the device mainly relate to how it fits into existing hospital workflows. Since the device is intended to be reusable and durable, disposal is not expected to create additional burden for hospital sterilization or maintenance staff. During use, the device may help reduce stress for clinicians by making assisted vaginal delivery more accessible to providers with less specialized training, which could also improve the labor experience for patients. Potential economic impacts include lower upfront and replacement costs compared to existing AVD devices, which is especially important in low-resource settings where cost can create a barrier to adopting a new device. To identify these impacts, we revisited the stakeholder and ecosystem maps we created to understand how the device could affect not only doctors and patients, but also hospital staff involved in purchasing, sterilization, and maintenance.

Every member of our team has a different background in terms of culture and privilege, but one notable difference in identity was how we spent our time outside of academics through extracurricular involvement such as clubs and hobbies. Despite these differences, we were all motivated engineering students who chose to work on a global health project that felt impactful. Because each team member balanced this project with other commitments, we found it important to establish multiple weekly meetings with clear agendas and internal deadlines. This structure allowed us to divide individual work for independent time and make design decisions, such as when we transitioned designs between DR2 and DR3. Since the project was based on a need identified in Ghana, and although one team member had traveled there previously, we recognized that we are all American and could unintentionally introduce assumptions or bias to the project. To address this, we connected with a doctor in Ghana through our sponsor and relied on secondary research to supplement areas where we lacked direct experience. In regard to our sponsor relationship, sharing an engineering background was helpful during periods when the team felt discouraged due to design pushback. Our sponsor understood that iteration through feedback and redesign is inherent to engineering design, which helped give our team motivation and confidence to continue working on the project. At the same time, her role as a practicing OBGYN gives her a power difference as any design she deemed unsafe would need to be scrapped. Her clinical expertise and connections in Ghana ultimately strengthened our requirements and specifications and guided the final design.

As mechanical engineers, we held power in determining the design of the device, but this power was balanced by knowing that too complicated of designs would not be adopted by clinicians or accepted by pregnant patients. Our engineering background shaped how we approached the problem, but we did not possess the same clinical knowledge as our end users, OBGYNs and midwives, regarding what practices are safe or appropriate during labor. To address this gap, we actively sought feedback from clinicians, including an OBGYN practicing in the country where the need was identified. At times, we encountered conflicting feedback from our sponsor and section instructor, which we resolved through clear communication and by refining the problem statement to ensure agreement across stakeholders. Many of the cultural considerations influencing these dynamics were addressed in the previous section.

The primary ethical dilemmas we encountered involved safety and product longevity. In LMIC settings, devices that break or are difficult to repair often end up unused in storage, which wastes resources and limits impact. Because of this, we considered how replacement time and part durability could affect long term use, although manufacturing requirements were prioritized on the lower end due to the project being a proof of concept. Another ethical challenge involved balancing ease of operation with patient and fetus safety, particularly when evaluating the drawstring mechanism. There were concerns about potential interference with the natural labor process, which we addressed by incorporating sponsor feedback and carefully defining how the mechanism would function. We do not believe our personal ethics differ significantly from those upheld by the University of Michigan, as values such as transparency and integrity are central both to academic work and medical device design.

Recommendations

The first design recommendation we have is to increase the tolerance of the claw tips. The claw tips were 3D printed to fit on the 1 mm claw prongs, but the slit that was supposed to go over the prongs was also only 1 mm. This meant that the claw tips did not fit as well as we had hoped for, and they warped when they were put onto the prongs. To amend this, we would recommend increasing the tolerance for the claw tip width to allow it to fit more seamlessly.

There are also some design recommendations that would make the device easier to handle. First, rotating the drawstring mechanism that tightens the claw prongs around the fetal head could make the device easier to handle. As designed, the device is mostly pushed away from or pulled towards the operator, except for the drawstring mechanism, which requires the string to be pulled laterally to be tightened. When tested by our team, we found that we had to readjust our grip to pull the string. To fix this, we recommend simply rotating the drawstring mechanism so the string can be pulled toward you, allowing for easier adjustment of the tightness of the claw prong. Another feature that could be changed to make the device easier to handle is the length of the device. Because the device was designed fully using CAD, it was made to what we thought would be a proportional length. While it does look somewhat proportional, it ended up larger than we envisioned in our heads. This means that it is longer than it has to be, and a section of the inner cylinder is solid without any function or purpose. This could then be taken out, making the device a bit shorter, and therefore lighter and easier to handle. A third part that could be changed to make the device easier to use is the handle. The current handle on our prototype is bulky, and was never adjusted to be easier to grab. We would recommend that this should be changed to be more user friendly. A new design could be found by looking at devices that are handled similarly to ours, and ergonomics testing could also be done to see what design would be the most comfortable and easy to use.

We also recommend changing the extension spring that gives a warning to the user when traction force exceeds 200 N. While this does work as intended, it can be difficult to see if you are not paying attention to that part of the device, and it does not fulfill our specification of not allowing more than 200 N of traction force. To fix this, we would recommend a mechanism similar to the drawstring mechanism. This would be placed where the extension spring was, and with the right compression spring and amount of compression, it could act as a safety that stays in place until 200 N is reached, after which it starts to slip, meaning the extra force goes towards pulling the string inside the device rather than pulling on the fetus' head.

Our final recommendation is that this project be given to a project team instead of continuing to be used in the 450 class. Firstly, this would help with the initial challenge of no members of our team having any real medical background if handed off to an MHeal club. Also, we believe that only having one semester to provide a proof of concept limited what we were able to accomplish, as we felt that we ran out of time. Additional time would have allowed for more opportunity to show our device to sponsors and stakeholders, and it would also allow for more verification and validation testing. Because project teams are not limited by semester breaks, they can have long term relationships with sponsors to better understand everything that

the sponsor wants. This means that they can become more knowledgeable about the problem topic, and also have more time to come up with and readjust ideas. As such, we believe handing the assistive vaginal delivery device project over to a project team would make an opportunity for a device to be created that addresses and tests all requirements and specifications, and would have a higher likelihood of being carried on past the proof of concept phase.

Conclusion

AVD devices can be an alternative method before performing a preventable emergency C-section that is caused by obstructed labor. While C-sections can be the right decision in certain situations, they require longer recovery time, are high cost, and come with surgical risk. Current AVD devices on the market are vacuum extractors, single or multi-use, and obstetric forceps. Both require a high level of training regarding the correct placement of devices, ensuring minimal injury to the patient and fetus, which limits their usage in LMICs. The GHDI 2025 cohort identified our need to come up with a novel concept for an AVD device that requires minimal training to use. Our design process is more of an activity-based and procedural model, rather than linear, because our design required a continuous integration and iterative process.

Identifying our influential stakeholders and prominent contextual factors in LMICs was important when creating our requirements and specifications. Contextual factors such as limited infrastructure and resources of healthcare facilities in LMICs, helped us identify our top stakeholders, having power over and high interest in our design, and who will be considered when design decisions are being made. Low resource hospitals hold power over the implementation of the device, pregnant people hold power through consent, and doctors and midwives are the primary users who decide how/when the device is used. Our high priority requirements (safety of the fetus, easy to use, operable without a dependence on external power, adjustable while in use, and reliable) help us define the specification our AVD device needs to meet to be tailored to LMICs.

Our concept generation phase produced over 80 designs for a new AVD device by employing techniques such as morphological analysis, functional decomposition, and team brainwriting. This approach allowed us to consider a wide range of methods for fetal delivery as we aimed to discover a truly novel concept. We narrowed this pool of ideas to our top five candidates and ultimately to our first selected design using ranking tools like 2x2 matrices and a modified Pugh chart. However, stakeholder feedback and team deliberation revealed that the inflatable belt concept would not be a safe option, prompting a reevaluation. This process led us to pursue the octopus device, which was further developed into our current claw-based design. Through engineering analysis, we made final decisions regarding the claw mechanism, specifically the traction subsystem, the drawstring subsystem, and the dimensions of the claw prongs. The only difference between our build design and final design is the use of cost-effective prototyping materials, with the final design employing biocompatible and sterilizable components that meet ISO 10993 standards. After constructing our build design, we began testing some of our high priority requirements and specifications with our validation testing

plans. We visited a birthing and measured the forces exerted and withstood by different parts of our device to make sure it would work as intended. During the testing process, we received feedback about our device that would have prompted a redesign if there was enough time for more manufacturing. Since there wasn't, we proceeded with our design and have mentioned any changes throughout the report as appropriate, namely redesigning the traction force safety mechanism.

While we are finished working on our design, we understand that improvements can still be made. Due to the redesigns we went through early on in the semester, we lost out on valuable time that could have been spent verifying our design after the prototype was completed. Because of this, we feel as though the design we came up with serves as a good base proof of concept, but it has a lot of room for improvement, and it would require more time and testing before being confirmed as a device that could actually be used in a hospital setting.

Acknowledgements

We want to acknowledge our sponsor Dr. Dhanu Thiyag for all her assistance this semester, specifically in the problem definition and design concept phases. We also want to thank her for sharing her knowledge of obstetrics and global health with us. We also want to acknowledge our professor Dr. Julia Kramer for her assistance during the design process and knowledge of global health throughout this semester. Special thanks to Dr. Nana Oduro of Korle Bu Teaching Hospital for his expertise of birthing procedures and available equipment in Ghana. His feedback on our design decisions was crucial to the improvements made throughout the semester. Next, we want to thank the Clinical Simulation Center at the Towsley Center for Continuing Medical Education for the use of their birthing simulators and Andrea Mitz for helping us schedule our time there. Additionally, we would like to thank the members of the Summer 2025 GHDI cohort for the report on their findings which helped us understand the initial problem scope and provided guidance in the beginning of the semester. Lastly, we would like to thank our peers in MECHENG 450 Section 2 for their feedback on our presentations, pitches, design choices, and other parts of the design process.

References

[1] Cohen, W. R., and Friedman, E. A., 2024, “The Second Stage of Labor,” Am. J. Obstet. Gynecol., **230**(3), pp. S865–S875. https://doi.org/10.1016/j.ajog.2022.06.014.

[2] Desta, M., Mekonen, Z., Alemu, A. A., Demelash, M., Getaneh, T., Bazezew, Y., Kassa, G. M., and Wakgari, N., 2022, “Determinants of Obstructed Labour and Its Adverse Outcomes among Women Who Gave Birth in Hawassa University Referral Hospital: A Case-Control Study,” PLoS ONE, **17**(6), p. e0268938. https://doi.org/10.1371/journal.pone.0268938.

[3] Dhanalakshmi Thiyagarajan, 2025, “Project Sponsor Meetings.”

[4] Kongnyuy, E., Mlava, G., and Broek, N. van den, 2008, “Establishing Standards for Obstructed Labour in a Low-Income Country,” Rural Remote Health, **8**(3). https://doi.org/10.22605/RRH1022.

[5] Gumanga, S. K., Kwame-Aryee, R., Seffah, J. D., and Amuzu, S. K., 2012, “Ten -Year Review of Vacuum Assisted Vaginal Deliveries at a District Hospital in Ghana,” West Afr. J. Med., **31**(3), pp. 192–197.

[6] Songsawatwong, M., 2023, “C-Section vs. Vaginal Birth: The Difference and Which Is Best for You,” Mother Baby Cent. [Online]. Available: https://www.themotherbabycenter.org/blog/2023/04/c-section-vs-vaginal-birth/. [Accessed: 27-Sept-2025].

[7] “WHO Statement on Caesarean Section Rates.” [Online]. Available: https://www.who.int/news-room/questions-and-answers/item/who-statement-on-caesarean-section-rates-frequently-asked-questions. [Accessed: 27-Sept-2025].

[8] Asah-Opoku, K., Onisarotu, A. N., Nuamah, M. A., Syurina, E., Bloemenkamp, K., Browne, J. L., and Rijken, M. J., 2023, “Exploring the Shared Decision Making Process of Caesarean Sections at a Teaching Hospital in Ghana: A Mixed Methods Study,” BMC Pregnancy Childbirth, **23**(1), p. 426. https://doi.org/10.1186/s12884-023-05739-7.

[9] Singh, A., and Rathore, P., 2011, “A Comparative Study of Feto-Maternal Outcome in Instrumental Vaginal Delivery,” J. Obstet. Gynaecol. India, **61**(6), pp. 663–666. https://doi.org/10.1007/s13224-011-0119-3.

[10] Baskett, T. F., Fanning, C. A., and Young, D. C., 2008, “A Prospective Observational Study of 1000 Vacuum Assisted Deliveries With the OmniCup Device,” J. Obstet. Gynaecol. Can., **30**(7), pp. 573–580. https://doi.org/10.1016/S1701-2163(16)32890-0.

[11] Jeon, J., and Na, S., 2017, “Vacuum Extraction Vaginal Delivery: Current Trend and Safety,” Obstet. Gynecol. Sci., **60**(6), pp. 499–505. https://doi.org/10.5468/ogs.2017.60.6.499.

[12] Hessburg, J. P., Murthy, P., Patel, K. D., Ostrowski, D. P., and Sienko, K. H., 2012, “An Assisted Obstetric Delivery Device for Resource-Limited Settings,” Int. J. Serv. Learn. Eng. Humanit. Eng. Soc. Entrep., **7**(2), pp. 1–12. https://doi.org/10.24908/ijsle.v7i2.4331.

[13] Mottet, N., Hotton, E., Eckman-Lacroix, A., Bourtembourg, A., Metz, J. P., Cot, S., Poitrey, E., Delhomme, L., Languerrand, E., Nallet, C., Lallemant, M., Draycott, T., and Riethmuller, D., 2024, “Safety and Efficacy of the OdonAssist Inflatable Device for Assisted Vaginal Birth: The BESANCON ASSIST Study,” Am. J. Obstet. Gynecol., **230**(3, Supplement), pp. S947–S958. https://doi.org/10.1016/j.ajog.2023.05.016.

[14] “Forceps Delivery and Vacuum Extraction | GLOWM.” [Online]. Available: http://www.glowm.com/section-view/heading/Forceps Delivery and Vacuum Extraction/item/131. [Accessed: 28-Sept-2025].

[15] “Buy Body Fitness Vacuum Delivery Baby Suction Silicon Cup(Ventouse Cup)For Vacuum Extractor Suction Delivery Cup Gynaecology Vacuum Cup(70Mm) Online at Low Prices in India - Amazon.In.” [Online]. Available: https://www.amazon.in/Vacuum-Delivery-Cup-Extractor-Gynaecology/dp/B0CTFM3MNX. [Accessed: 28-Sept-2025].
[16] “VACUUM EXTRACTOR Obstetrical (Kiwi OmniCup), Manual s.u.,” Unicat. [Online]. Available: https://www.unicat.msf.org/cat/product/71860. [Accessed: 28-Sept-2025].
[17] Paola Martinez, 2025, “GHDI Information Recap.”
[18] Wynn, D., and Clarkson, J., 2005, “Models of Designing,” *Design Process Improvement: A Review of Current Practice*, J. Clarkson, and C. Eckert, eds., Springer, London, pp. 34–59. https://doi.org/10.1007/978-1-84628-061-0_2.
[19] Marks, I. H., Thomas, H., Bakhet, M., and Fitzgerald, E., 2019, “Medical Equipment Donation in Low-Resource Settings: A Review of the Literature and Guidelines for Surgery and Anaesthesia in Low-Income and Middle-Income Countries,” BMJ Glob. Health, **4**(5), p. e001785. https://doi.org/10.1136/bmjgh-2019-001785.
[20] “Assisted Vaginal Delivery in Low and Middle Income Countries: An Overview.” [Online]. Available: https://obgyn.onlinelibrary.wiley.com/doi/epdf/10.1111/1471-0528.14477. [Accessed: 30-Sept-2025].
[21] Grimm, M. J., 2021, “Forces Involved with Labor and Delivery—A Biomechanical Perspective,” Ann. Biomed. Eng., **49**(8), pp. 1819–1835. https://doi.org/10.1007/s10439-020-02718-3.
[22] Pettersson, K. A., Westgren, M., Blennow, M., and Ajne, G., 2020, “Association of Traction Force and Adverse Neonatal Outcome in Vacuum-Assisted Vaginal Delivery: A Prospective Cohort Study,” Acta Obstet. Gynecol. Scand., **99**(12), pp. 1710–1716. https://doi.org/10.1111/aogs.13952.
[23] O’Brien, S. M., Winter, C., Burden, C. A., Boulvain, M., Draycott, T. J., and Crofts, J. F., 2017, “Pressure and Traction on a Model Fetal Head and Neck Associated with the Use of Forceps, Kiwi™ Ventouse and the BD Odon Device™ in Operative Vaginal Birth: A Simulation Study,” Clin. Infect. Dis. Off. Publ. Infect. Dis. Soc. Am., **124**(Suppl 4), pp. 19–25. https://doi.org/10.1111/1471-0528.14760.
[24] “Kiwi® Complete Vacuum Delivery System Demonstration by Dr Sophia Webster - YouTube.” [Online]. Available: https://www.youtube.com/watch?v=A239N-qrhQ0. [Accessed: 28-Sept-2025].
[25] “Health Workforce.” [Online]. Available: https://www.who.int/health-topics/health-workforce. [Accessed: 28-Sept-2025].
[26] Nana Essuman Oduro, 2025, “Stakeholder Interview with Dr. Oduro.”
[27] Tonismae, T., Canela, C. D., and Gossman, W., 2025, “Vacuum Extraction,” *StatPearls*, StatPearls Publishing, Treasure Island (FL). [Online]. Available: http://www.ncbi.nlm.nih.gov/books/NBK459234/. [Accessed: 04-Sept-2025].
[28] “What Are the Stages of Labor?,” Clevel. Clin. [Online]. Available: https://my.clevelandclinic.org/health/body/22640-stages-of-labor. [Accessed: 18-Sept-2025].
[29] Konig Surgical Instruments, “Obstetrical Forceps – Recommended Cleaning, Sterilization, and Instructions for Use.”
[30] SPECULUM, “Complete Vacuum Delivery System with PalmPump INSTRUCTIONS FOR USE.”

[31] “Wrigley Obstetrical Outlet Forceps Stainless Steel,” Dent. Point PTY LTD. [Online]. Available: https://dentalpoint.com.au/product/wrigley-obstetrical-forceps-stainless-steel/. [Accessed: 29-Sept-2025].
[32] “In-Date Laborie Vacuum-Assisted Delivery VAC-6000M Box of 5... - Synergy Surgical™.” [Online]. Available: https://www.synergysurgical.com/product/0-in-date/346-laborie/1199-vacuum-assisted-delivery/46283112-clinical-innovations-kiwi-omnicup-VAC-6000M/?gad_source=4&gad_campaignid=20611309343&gbraid=0AAAADpxi0eKFrveWmOZaPxf010SI1sj8&gclid=CjwKCAjwlt7GBhAvEiwAKal0cvkpEzzWMi2ZIoD8zpGxUS8pcSh_2C9Rc60zpPoCVbgT55oq8QwQMRoCQs8QAvD_BwE. [Accessed: 28-Sept-2025].
[33] “Ultrasound- Portable US 1000 - Integrated Medical.” [Online]. Available: https://integratedmedicalonline.com/shop/ultrasound-portable-us-1000/. [Accessed: 28-Sept-2025].
[34] Shah, S., O’Byrne, M., Wilson, M., and Wilson, T., 2011, “Elevators or Stairs?,” CMAJ Can. Med. Assoc. J., **183**(18), pp. E1353–E1355. https://doi.org/10.1503/cmaj.110961.
[35] 2025, “How to Find the Right Size for Your Backpack?,” Eiken Shop. [Online]. Available: https://eikenshop.com/blogs/products-guide/how-to-find-backpack-size. [Accessed: 28-Sept-2025].
[36] Koo, M., and Yang, S.-W., 2025, “Likert-Type Scale,” Encyclopedia, **5**(1), p. 18. https://doi.org/10.3390/encyclopedia5010018.
[37] “Neagele Obstetrical Forceps | Medical Tools Shop.” [Online]. Available: https://medical-tools.com/shop/neagele-obstetrical-forceps.html. [Accessed: 28-Sept-2025].
[38] American Institute of Architects and USA, eds., 1987, *Guidelines for Construction and Equipment of Hospital and Medical Facilities*, American Institute of Architects Press, Washington, DC.
[39] CDC, 2024, “Sterilizing Practices,” Infect. Control. [Online]. Available: https://www.cdc.gov/infection-control/hcp/disinfection-sterilization/sterilizing-practices.html. [Accessed: 28-Sept-2025].
[40] “Safe Lifting in the Office (or Wherever You Are),” Heal. Ergon. [Online]. Available: https://www.healthworksergo.com/resources-individuals/safe-lifting-in-the-office-or-wherever-you-are. [Accessed: 29-Sept-2025].
[41] “The Importance of BEP and BER - European Biomedical Institute.” [Online]. Available: https://ebi.bio/the-importance-of-bep-and-ber/. [Accessed: 28-Sept-2025].
[42] Jagger, J., Hunt, E. H., and Pearson, R. D., 1990, “Sharp Object Injuries in the Hospital: Causes and Strategies for Prevention,” Am. J. Infect. Control, **18**(4), pp. 227–231. https://doi.org/10.1016/0196-6553(90)90163-M.
[43] Shim, J.-Y., and Kang, B., 2017, “Development of Electrohydraulic Forming Process for Aluminum Sheet with Sharp Edge,” Adv. Mater. Sci. Eng., **2017**, pp. 1–10. https://doi.org/10.1155/2017/2715092.
[44] “Adoption of the Decimal Metric System of Weights and Measures by Country – US Metric Association.” [Online]. Available: https://usma.org/adoption-of-the-decimal-metric-system-of-weights-and-measures-by-country. [Accessed: 28-Sept-2025].
[45] MINISTRY OF HEALTH and MINISTRY OF ENVIRONMENT SCIENCE, TECHNOLOGY AND INNOVATION, 2020, “NATIONAL GUIDELINES FOR HEALTH CARE WASTE MANAGEMENT IN GHANA.”

[46] “LifeVac Home Kit - Toddler and Adult Choking Rescue Device,” LifeVac. [Online]. Available: https://lifevac.net/products/lifevac. [Accessed: 21-Oct-2025].
[47] Julia Kramer, 2025, “Project Mentor/Sponsor Meeting.”
[48] “Electrical Stimulation | Treatment/Procedure | UAMS Health,” https://uamshealth.com/. [Online]. Available: https://uamshealth.com/treatment/electrical-stimulation/. [Accessed: 21-Oct-2025].
[49] “34 Weeks Pregnant: Symptoms & Baby Development | Pampers UK,” Pampers-GB-EN. [Online]. Available: https://www.pampers.co.uk/pregnancy/pregnancy-calendar/34-weeks-pregnant. [Accessed: 08-Oct-2025].
[50] Shobeiril, F., and Nazari, M., “Symphysis-Fundal Height and Abdominal Circumference Measurements as Indicators for Low Birth Weight.”
[51] 2025, “University of Michigan Hospital Visit.”
[52] 2024, “VELCRO® Brand Adhesive Backed Hook and Loop Fasteners.” [Online]. Available: https://www.hookandloop.com/brands/velcro/peel-and-stick. [Accessed: 08-Oct-2025].
[53] “Effect of Sterilization on the Dimensional and Mechanical Behavior of Polylactic Acid Pieces Produced by Fused Deposition Modeling.” [Online]. Available: https://www.mdpi.com/2073-4360/15/15/3317. [Accessed: 13-Dec-2025].
[54] “(PDF) Effect of Steam Autoclaving on Laser Sintered Polyamide 12.” [Online]. Available: https://www.researchgate.net/publication/346050670_Effect_of_steam_autoclaving_on_laser_sintered_polyamide_12. [Accessed: 13-Dec-2025].
[55] “3D Printing Materials for the Medical Industry,” Xometry Pro. [Online]. Available: https://xometry.pro/en-eu/articles/3d-printing-medical-industry/. [Accessed: 14-Dec-2025].
[56] “ASM Material Data Sheet AA6061.” [Online]. Available: https://asm.matweb.com/search/specificmaterial.asp?bassnum=ma6061t6. [Accessed: 10-Nov-2025].
[57] “ASM Material Data Sheet Stainless Steel 304.” [Online]. Available: https://asm.matweb.com/search/specificmaterial.asp?bassnum=mq304a. [Accessed: 10-Nov-2025].
[58] “6061 Aluminum vs. AISI 304 Stainless Steel :: MakeItFrom.Com.” [Online]. Available: https://www.makeitfrom.com/compare/6061-AlMg1SiCu-3.3214-H20-A96061-Aluminum/AISI-304-S30400-Stainless-Steel. [Accessed: 10-Nov-2025].
[59] “Nylon: Understand the Key Benefits and Applications.” [Online]. Available: https://www.protolabs.com/materials/nylon/. [Accessed: 10-Nov-2025].
[60] “In Vivo Friction Properties of Human Skin.” https://doi.org/10.3109/03093649909071625.
[61] “Nylon vs. Polyester: Differences and Similarities.” [Online]. Available: https://www.xometry.com/resources/materials/nylon-vs-polyester/. [Accessed: 10-Nov-2025].
[62] “JaypeeDigital | Pelvis and Fetal Skull.” [Online]. Available: https://www.jaypeedigital.com/book/9789386056665/chapter/ch4. [Accessed: 10-Nov-2025].
[63] Brandt, J. M., Allen, G. A., Haynes, J. L., and Butler, M. G., 1990, “NORMATIVE STANDARDS AND COMPARISON OF ANTHROPOMETRIC DATA OF WHITE AND BLACK NEWBORN INFANTS,” Dysmorphol. Clin. Genet. Off. Publ. Cent. Birth Defects Inf. Serv. Inc, **4**(4), pp. 121–137.

[64] Zhang, M., and Mak, A. F. T., 1999, “In Vivo Friction Properties of Human Skin,” Prosthet. Orthot. Int., **23**(2), pp. 135–141. https://doi.org/10.3109/03093649909071625.
[65] Burande, A. P., Jayaraj, V., Pai, A. V., Akkarappatty, P., Arathi, V. L., Pradeep, M., and Paily, V. P., 2023, “‘Assisted Vaginal Birth Using the Paily Obstetric Forceps vs Ventouse – A Randomized Clinical Trial,’” Eur. J. Obstet. Gynecol. Reprod. Biol., **280**, pp. 40–47. https://doi.org/10.1016/j.ejogrb.2022.10.028.
[66] “The 7 Cardinal Movements of Labor.” [Online]. Available: https://www.partumhealth.com/resources/7-cardinal-movements-of-labor. [Accessed: 11-Nov-2025].
[67] Salazar, A., Cano, A. J., and Rodríguez, J., 2022, “Mechanical and Fatigue Behaviour of Polyamide 12 Processed via Injection Moulding and Selective Laser Sintering. Analysis Based on Kitagawa-Takahashi Diagrams,” Eng. Fract. Mech., **275**, p. 108825. https://doi.org/10.1016/j.engfracmech.2022.108825.
[68] “North American Stainless.”
[69] FDA Ghana, 2016, “GUIDELINE FOR REGISTRATION OF MEDICAL DEVICE.”
[70] Núñez, J. L., 2019, “The Densities of All 3D Printing Materials,” Bitfab. [Online]. Available: https://bitfab.io/blog/3d-printing-materials-densities/. [Accessed: 10-Dec-2025].
[71] “3D Filament Cost,” Makeshaper. [Online]. Available: https://www.makeshaper.com/3d-printer-filament-price-cost. [Accessed: 10-Dec-2025].

Appendix A: Additional Concepts

Concepts generated from the team brainwriting session as listed below. This is a shortened list as some ideas overlapped heavily on a concept level.

1. Vibrating Paddles

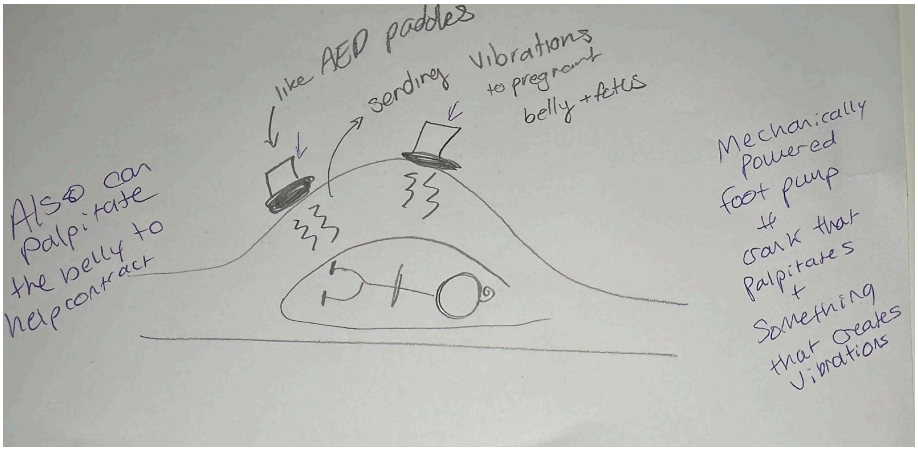

Figure A.1. By sending vibrations to the birthing patient, we had hoped it would reduce friction during the delivery process and potentially also help the belly contract through palpitations.

2. Fetus Shaker/Centrifuge Chair

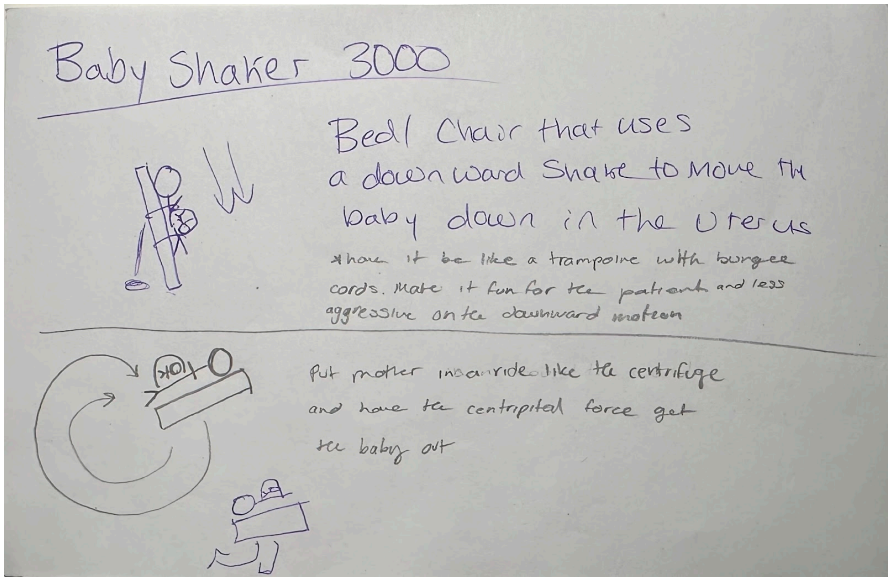

Figure A.2 The purpose of the chair was to shake the birthing patient in a downward motion to essentially "shake the fetus out." Another variation was to "spin the fetus out" by using centripetal force that was developed during brainwriting

3. Self sufficient Glove

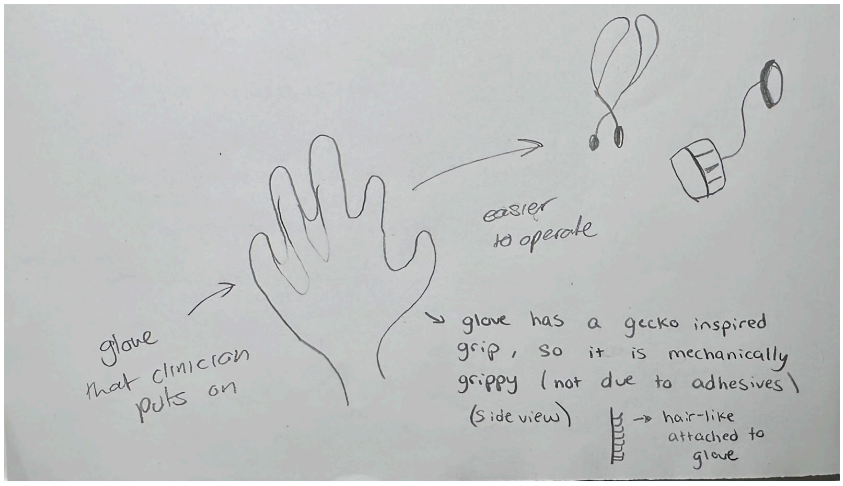

Figure A.3. By using the structure and muscle of a hand combined with the programming of the glove, anyone who put on this glove would be able to operate an AVD device without training beforehand. After handing the idea off to another team it was interpreted as a sticky glove that would have adhesive to grip the fetus' head to pull out.

4. Muscle Stimulation

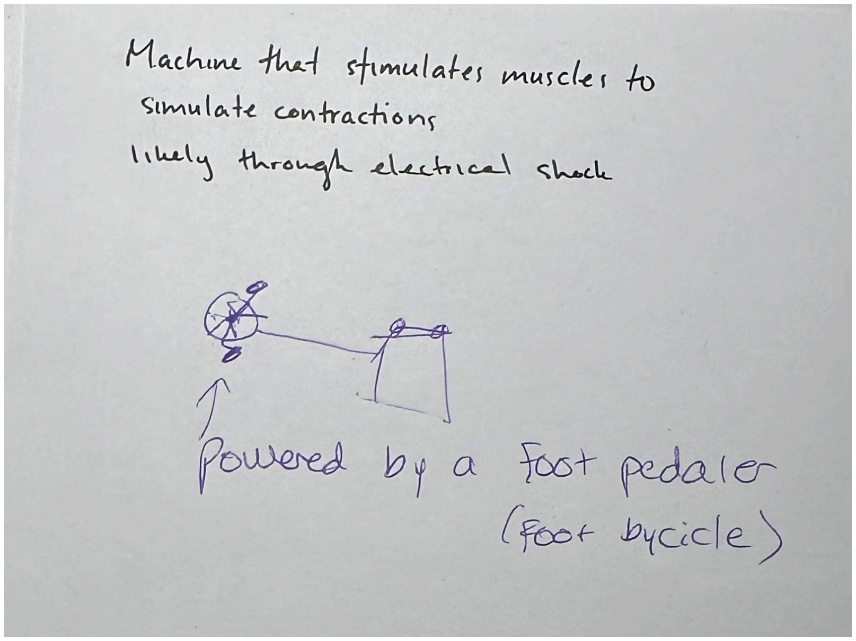

Figure A.4. A machine that stimulates muscle contractions through electrical stimulation and is powered by a foot bicycle

5. Sled Device

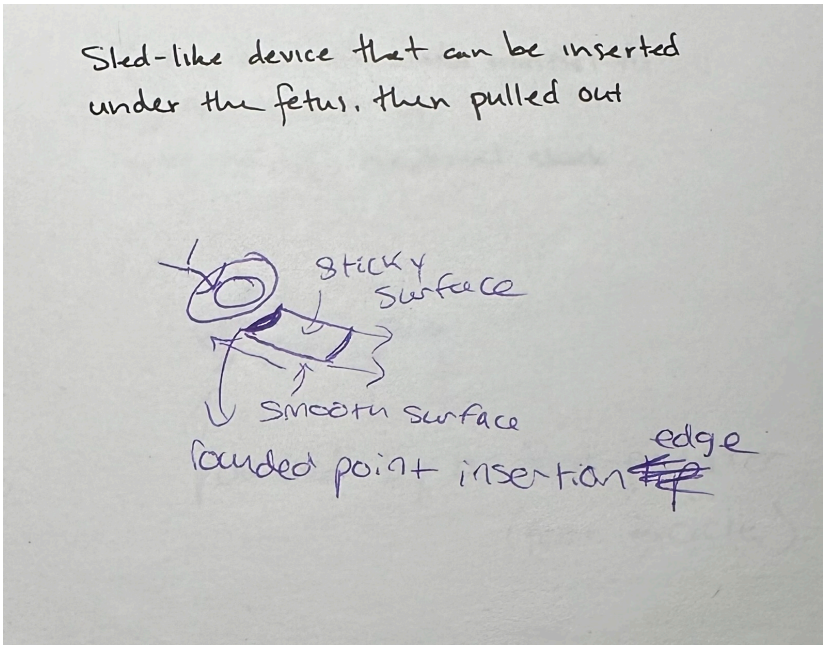

Figure A.5. A sled is inserted into the birthing patient, towards the spine, and under the fetus, and the smooth surface causes a smooth pull out.

6. Magnetic Cap

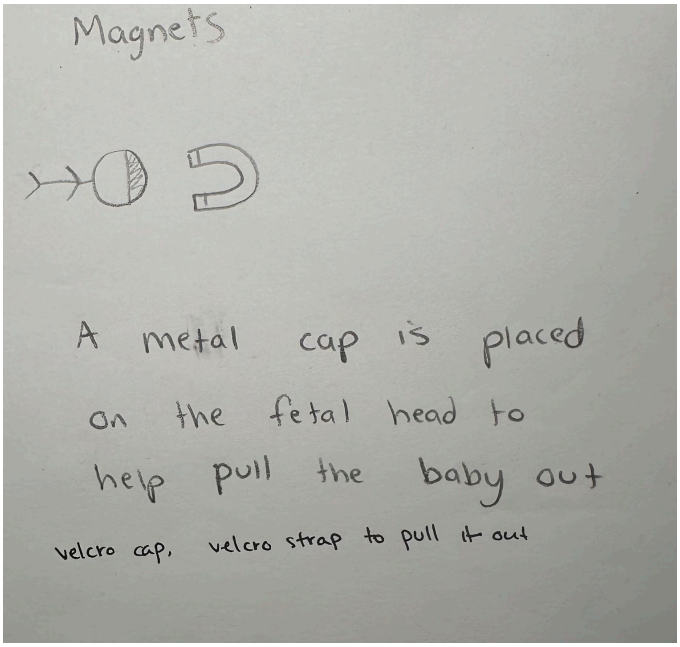

Figure A.6. A metal cap is placed on the fetus' head and using magnetic force, the fetus is pulled/attracted out. Another variation from brainwriting is using hooks and loops to make a cap and strap to attach and pull on the fetus' head.

7. Lasso Device

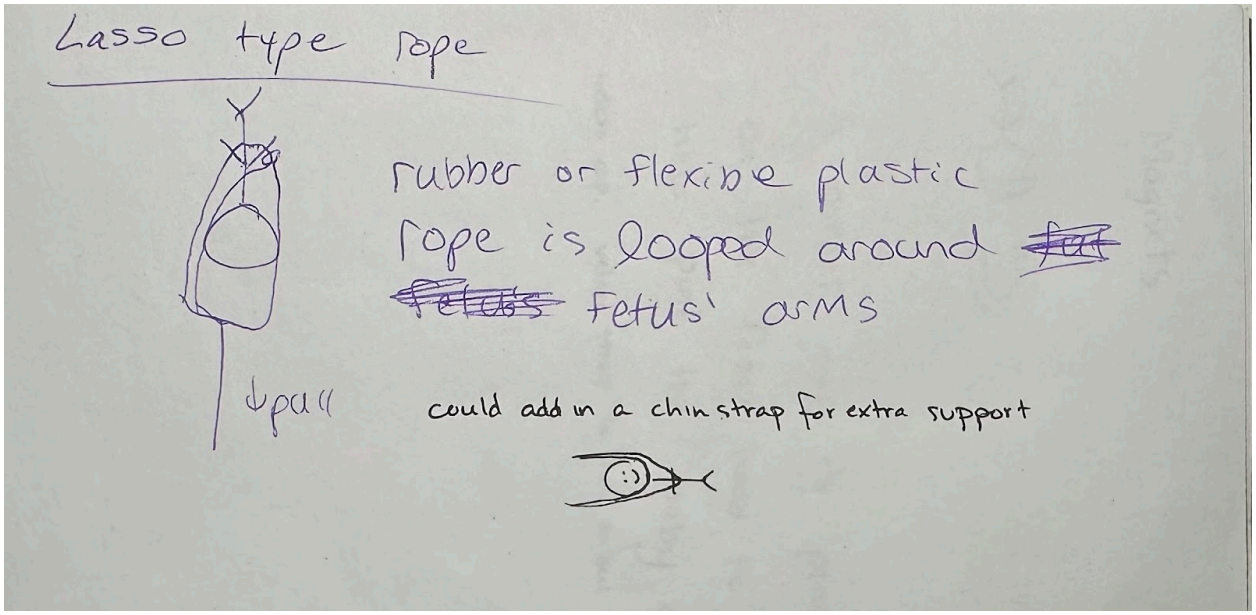

Figure A.7. A rope is looped around the fetus' arms along with a strap to secure the chin before using a pulling force on the fetus

8. Fresh Pie Motivation

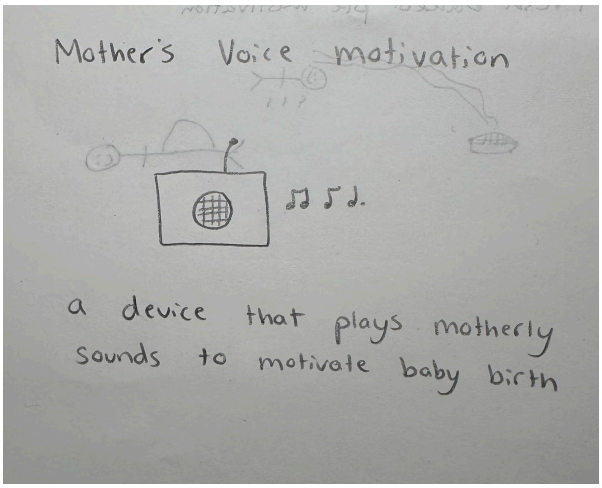

a.

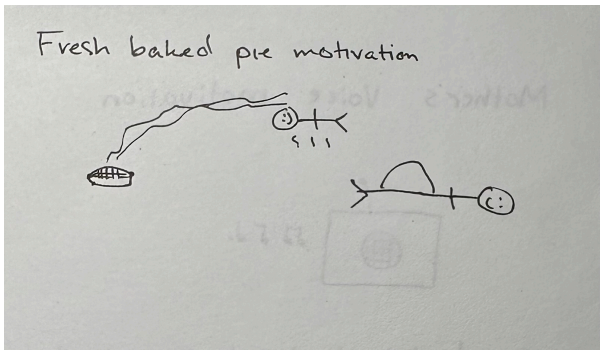

b.

Figure A.8 a&b. This idea came from trying to create a concept that would have no contact with the birthing patient or fetus. Because maternal exhaustion may cause the need for an AVD we thought a device for motivation could be a solution, though the birthing patient's voice or food.

Appendix B: Engineering Analysis Calculations

First Design

Tube inflation: The largest outer tube has a volume of 3232 cm^3, and the largest inner tube has a volume of 1616 cm^3. This is based on the volume for cylinders with heights of 84 cm and 42 cm. These heights were taken from *Figure 8 (pg. 30)*. Using the pump shown in the figure, it would take 54 pumps to inflate the largest outer tube and 27 pumps to fill the largest inner tube. A pump with volume 160 cm^3 would be required to fill the larger tube in 20 pumps.

Pressure: Pressure is equal to force divided by area. The force that we took for this calculation was 200 N [21,22]. The area was half the surface area of the largest inner tube, a cylinder, or 461.8 cm^2. Dividing these gave a required pressure of 4340 Pa_g, with the non-ideal number being higher.

Force on fastening device: Based on geometry detailed in *Figure 8 (pg. 30)*, there is 400 cm^2 of hook and loop surface area. The lower of the closure strengths of a specific type of Velcro was 44.8 kPa [52]. Multiplying these numbers gives a force of approximately 1790 N, which is the force required to separate the Velcro. Since this number is greater than the 200 N being applied during childbirth, the Velcro is not at risk of separating while the device is in use.

Current Design

Prong Sizing:

Start by finding the width of each prong.

Use the pressure, force, and number of prongs to find the area of one claw prong.

$$P = \frac{F}{An} \tag{B.1}$$

$$A = \frac{F}{Pn} = 266.66mm^2 \tag{B.2}$$

Assuming the contact area of each prong is a square, take the square root to find the width.

$$\sqrt{266.66mm^2} = 16.33mm \tag{B.3}$$

Width dimension increased to 20mm as a safety factor to ensure proper force can be applied in imperfect conditions.

Next, find the length of each prong. Modeling the fetal head as an ellipse, using the craniofacial height and the head breadth as the major and minor diameters. Use half the value of the aforementioned measurements to determine the circumference of the ellipse.

Head breadth is 9.095 cm, craniofacial height is 11.67 cm [63], half of which is 4.5475 cm and 5.835 cm, respectively.

$$C \approx \pi(a+b)\left(3\frac{(a-b)^2}{(a+b)^2\left(\sqrt{-3\frac{(a-b)^2}{(a+b)^2}}+4+10\right)}+1\right) \tag{B.4}$$

$$\approx \pi(4.5475+5.835)\left(3\frac{(4.5475-5.835)^2}{(4.5475+5.835)^2\left(\sqrt{-3\frac{(4.5475-5.835)^2}{(4.5475+5.835)^2}}+4+10\right)}+1\right) = 32.7431cm \tag{B.5}$$

Take half the circumference to get the approximate length of a claw prong.

$$\frac{C}{2} = \frac{32.7431cm}{2} = 16.37155cm \quad \text{(B.6)}$$

Drawstring mechanism:

Find the force using pressure and area

$$F = PA \quad \text{(B.7)}$$

Area is the square cross section of a claw prong multiplied by the number of prongs

$$A = 20mm \times 20mm \times 5 = 0.002m^2 \quad \text{(B.8)}$$

$$F = 150kPa \times 0.002m^2 = 300N \quad \text{(B.9)}$$

This force is the force of friction needed to hold the string in place.

Use the friction force and the coefficient of friction to determine the normal force required to keep the string from slipping.

$$F_f = \mu N \quad \text{(B.10)}$$

$$N = \frac{F_f}{\mu} = \frac{300N}{0.4} = 750N \quad \text{(B.11)}$$

Using the normal force and the spring rate, apply Hooke's Law to find the distance the spring needs to be compressed to hold the string.

$$x = \frac{F}{k} = \frac{750N}{77532.5N/m} = 9.6734mm \quad \text{(B.12)}$$

We later found a new spring with a rate of 3470 N/m, now rearranging and applying the previous equation to find the normal force applied:

$$F = kx = (3470N/m)(9.6734mm) = 33.55N \quad \text{(B.13)}$$

Traction Force Spring Displacement Safety Mechanism:

Use Hooke's Law to find how far the string will stretch at the maximum safe level of force with the selected spring.

$$F = kx \quad \text{(B.14)}$$

$$x = \frac{F}{k} = \frac{200N}{13300N/m} = 15mm \quad \text{(B.15)}$$

Appendix C: Verification Plans and Results

The following section will outline the detailed plans for our high priority specifications. The specifications will appear in the order that they are listed in previous sections (*High Priority (pgs. 15&16) and High Priority Specifications (pgs. 46-51)*). Additional information provided, not included in the section *High Priority Specifications (pgs. 46-51)*, are state of the design, required equipment/users, tests required, and use of key takeaways.

Table C.1. Specification: Traction force applied to the fetus does not exceed 200 N.

State of the Design	Required Equipment/Users	Tests Required	Use of Key Takeaways
Full working prototype of our build design	Equipment: Force gauge to measure pulling (traction) force. Users: Team members.	Attach the force gauge to the handle of the device. Then, pull on the force gauge/handle until the fail safe is initiated. Monitor the force gauge the entire time and record the highest force. Do this test with multiple team members and at least 2 times per team member.	If the maximum force required to do the delivery is greater than 200 N, we may have to look back at the sources for our specification and consider why our device must reach unsafe forces in order to do an assisted delivery. We can also make sure that our visual display of the traction force changes from green to red at the correct applied forces.

Table C.2. Specification: Compressive pressure around the fetus's head does not exceed 150 kPa.

State of the Design	Required Equipment/Users	Tests Required	Use of Key Takeaways
Basic Test: Assembled drawstring mechanism Full Test: Full working prototype of our build design	Equipment: Basic Test: Force gauge to measure tension in the string, and calculator Full test: Force sensor to measure the force on the fetal head, birthing simulator, model fetus. Users: Team members.	Basic Test: Attach the force gauge to the string, pull until it slips through the drawstring mechanism, record highest force. Afterwards, calculate the compressive force from the claw prongs onto the fetus's head. Full Test; After deploying the device on the model fetus's head inside the birthing simulator pull on the drawstring to secure the claws around the fetus's head. Monitor the force gauge the entire time and record the highest force. Do this test with multiple team members and at least 2 times per team member.	If the maximum pressure around the fetus's head is greater than 150 kPa, we will have to consider if our design can be changed (claw prong geometry, etc.) to keep the pressure safe. We may also consider looking further into our sources for this specification to confirm that these are the correct numbers. We can also make sure that our auto-release system for the drawstring actually releases the string when the pressure exceeds the chosen pressure.

Table C.3. Results of verification testing for compressive pressure limit specification.

Units	Test 1	Test 2	Test 3	Test 4	Test 5
Lbf (Measured)	25	22	20.5	28	29
N (Converted)	111.21	97.86	91.19	124.55	128.998

$$F = P \cdot A = 150\ kPa \cdot 5(20)^2\ mm^2 = 300\ N \quad \text{(C.1)}$$

Table C.4. Specification: Device shall be able to release pressure or force on the fetus in less than 20 s (minimal) or less than 3 s (optimal).

State of the Design	Required Equipment/Users	Tests Required	Use of Key Takeaways
Basic Test: Assembled drawstring mechanism Full Test: Full working prototype of our build design	Equipment: Basic Test: Stopwatch Full: Model fetus and stopwatch/timer. Users: Team members or volunteers from our 450 section.	Basic Test: Measure the amount of time it takes for a user to push down on the drawstring mechanism and slide the string through. Full Test: After engaging the device on the fetus's head, start the stopwatch, press the release button, when pressure around the head is visually released, stop the timer. Do this test with multiple team members and at least 2 times per team member.	If the release cannot happen within the minimal time, we will have to look into design variables such as cord or claw prong properties.

Table C.5. Results of basic verification testing for release pressure specification.

Tests	1	2	3	4	5	6	7	8	9	10	11
S (Measured)	5.56	3.24	3.2	1.91	1.93	1.33	8.01	2.56	1.75	1.93	1.95

Table C.6. Specification: Operable by a birthing attendant, or clinician of similar training/experience after proper training on the device.

State of the Design	Required Equipment/Users	Tests Required	Use of Key Takeaways
Full working prototype of our build design	Equipment: Birthing simulator and model fetus. Users: 10 proxy users (medical students in their 2nd+ year of training).	For this verification, we would give our proxy users a "proper training" on the device. Within the course, proper training means detailed explanation of the device and a demonstration of the device being used. After this, we would have the proxy users interact with the device before trying a simulated AVD with a model fetus in a birthing simulator. We would also receive feedback from the users while we have them on basic usability, perception of the device, etc.	If the proxy users are unable to do a successful delivery, this means that one of two things failed. Either the instructional time was inadequate or the device is too complicated for the context we want to use it. It could also be that to fully train on the device, while ideally it would be less than current devices, it may still be longer than we have with the proxy users and therefore the failure was caused by the lack of available time.

Table C.7. Specification: Operating the device requires 1 user maximum.

State of the Design	Required Equipment/Users	Tests Required	Use of Key Takeaways
Full working prototype of our build design	Equipment: Birthing simulator and model fetus. Users: Team members.	Simulate an assisted vaginal delivery from deployment of the device to delivery with one team member. Do this test with all team members and ensure that each one is successfully able to do the delivery by themselves (without any outside assistance).	If our device passes this verification, it paints a good outlook that this device can be integrated into a hospital environment where there is a shortage of workers (such as the LMIC's the device is designed for).

Table C.8. Specification: Device operation lasts at least 1 hour (minimal) before needing to be recharged or is fully mechanical (optimal).

State of the Design	Required Equipment/Users	Tests Required	Use of Key Takeaways
CAD Model of Design	No further testing needed.	No further testing needed.	Assuming that our design does not change force or pressure generation methods, the results of this test means that our device is able to be used in an environment that has inconsistent access to electricity (such as the LMIC's the device is designed for).

Table C.9. Specification: Adjusting the device takes less than 2 minutes.

State of the Design	Required Equipment/Users	Tests Required	Use of Key Takeaways
Full working prototype of our build design	Equipment: Birthing simulator, model fetus, and stopwatch/timer. Users: Team members or proxy users (potentially the previously defined 10 proxy users).	After engaging the device on the fetus's head, start the stopwatch, start the steps to adjust the device to a new tightness and slightly different position, when the adjustment has been completed, stop the timer.	If the adjustment time is less than 45 seconds, we will bring in proxy users (see previous plans) to complete the same task outlined to the left. If greater than 45 seconds but less than 2 minutes, we assume that the specification is verified. If greater than 2 minutes, we will re-evaluate the steps that need to be taken.

Table C.10. Specification: Device can withstand 20 (minimal) or 2500 (optimal) use cycles without mechanical failure or material degradation from sterilization.

State of the Design	Required Equipment/Users	Tests Required	Use of Key Takeaways
CAD Model of Design with assigned materials	Equipment: Computer capable of simulation and research. Users: Team members.	No physical tests, however based on the information collected in previous tests on the birthing simulator where we measure the max traction (pulling or tenation) force achieved when simulating an AVD, we will calculate the stress then use the S-N curve for the material to calculate the cycles to failure. Research will have to be done to see how many sterilization cycles our chosen final materials are rated for. We will lastly have to do a calculation that combines the effects from both into one final "rated" cycle number.	If our final answer (in cycles) is below our minimum specification of 20 cycles, the material choices will have to be re-evaluated to increase the number of achievable cycles to at least 20.

$$P = \frac{F}{A} = \frac{200\ N}{\pi(5/2)^2\ mm^2} = 10.186\ MPa \tag{C.2}$$

$$P = \frac{F}{A} = \frac{200\ N}{1(5)\ mm^2} = 40\ MPa \tag{C.3}$$

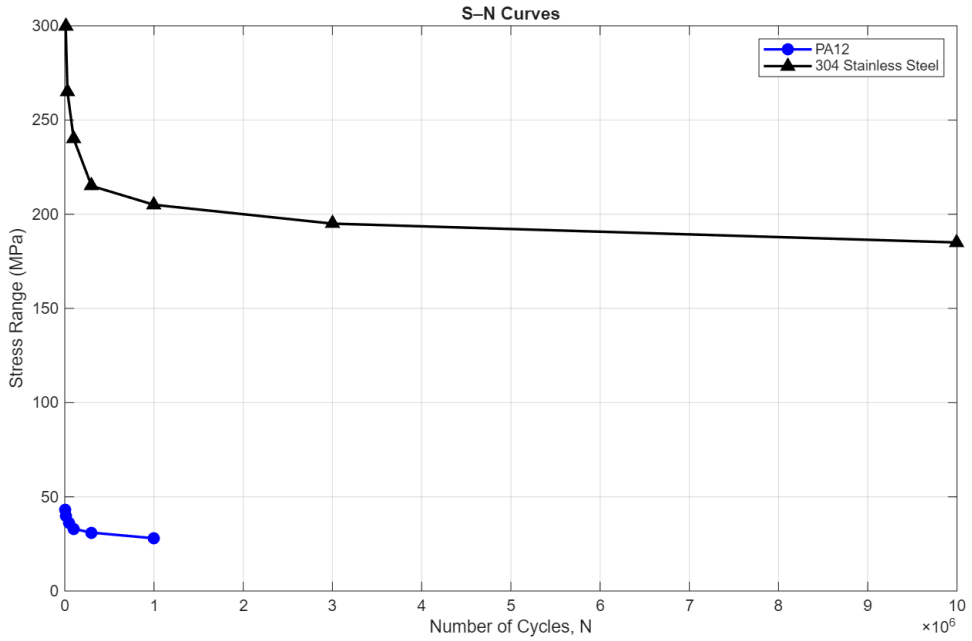

Figure C.1. S-N curve showing the cycles to failure for the two main materials in the final design.

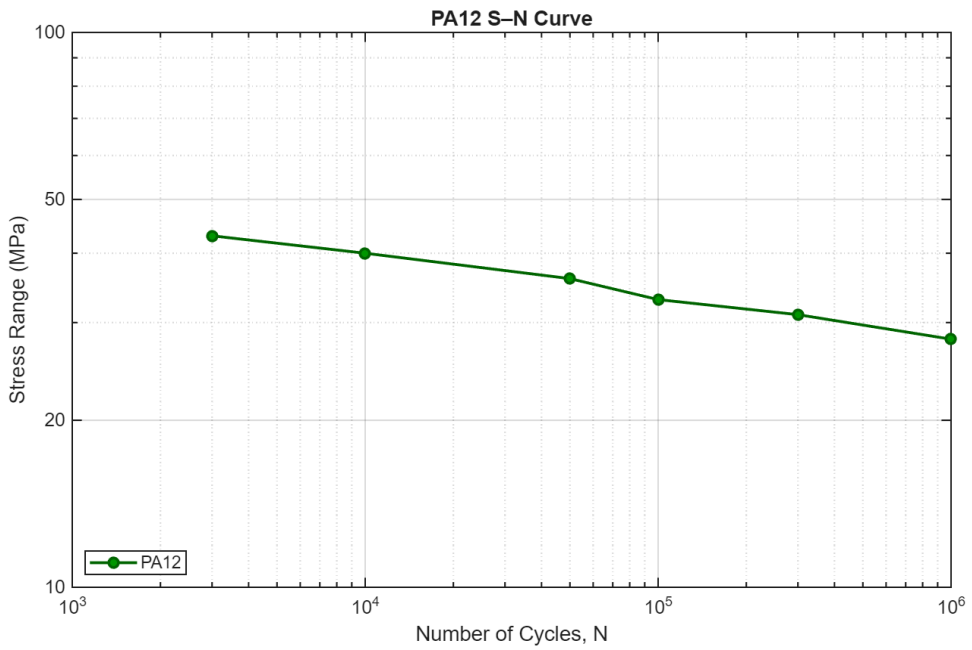

Figure C.2. S-N curve showing the cycles to failure for PA12, the weaker of the two materials and the one used for the geometry that will experience the highest stress range (10 MPa).

Appendix D: Validation Plans

For the assumption of user and patient satisfaction of the AVD device, the following plan would be put into place. The test would take place at a hospital with an OBGYN department such as University of Michigan Medicine. We would schedule time (most likely over a few days) to present the device to a group of 20-30 OBGYN staff (doctors, midwives, residents, anyone who is affected by the device). Once an initial introduction to the project and the overarching design is presented, we will give a survey (oral or on paper) collecting their general feedback about the design. After they have interacted with the device and potentially use it on a model fetus, we will give another survey (oral or on paper) to receive better feedback on their satisfaction with the device. We will perform a similar scenario with a group of 20-30 future or past birthing patients. For them, we will give a demonstration of our device on a birthing simulation. After the demonstration, we will gather feedback and use the likert scale for questions related to perceived safety, and comfortability to determine the success of our design. *Table D.1&D.2 (pgs. 84&85)* outline survey questions for feedback on user and patient satisfaction.

Table D.1. Survey questions for feedback on user satisfaction. Arrows denote a scaled response.

Question	1	2	3	4	5
Background on other AVD devices?	Short Answer				
Frequency of AVD use?	Daily	Weekly	1-2/Month	>6/Year	<6/Year
First impressions?	Short Answer				
What stands out/concerns you the most?	Short Answer				
General comments pre-interaction.	Short Answer				
This device was intuitive to understand.	Not at all	Took a thorough explanation	Neutral	Took a basic explanation	Intuitive
Perceived safety of the device on the patient?	Would not use	→	→	→	Would use right away
Compared usability to current AVD devices?	Better	Easier	Same	Harder	Unusable
Any design changes you would make?	Short Answer				
General comments post-interaction.	Short Answer				

Table D.2. Survey questions for feedback on patient satisfaction. Arrows denote a scaled response.

Question	1	2	3	4	5
Background on other AVD devices?	Short Answer				
First impressions?	Short Answer				
How does the design make you feel?	Scared	→	Concerned	→	No Change
What stands out/concerns you the most?	Short Answer				
General comments pre-demonstration.	Short Answer				
Perceived safety of the device?	Dangerous	→	→	→	Safe
What is the biggest concern now that you know how the device operates?	Short Answer				
How willing would you be to receive assistance from this device during labor?	Very willing	←	Equal to current AVD devices	←	Never
Any design changes you would make?	Short Answer				
General comments post-demonstration.	Short Answer				

For registering a medical device with the Ghana Food and Drugs Authority, one needed principle is ensuring that “characteristics and performances during their intended use will not be adversely affected by transport and storage conditions” [69]. For this, tests can be run to simulate the extremes of these conditions and ensure that the device’s characteristics and performance on a simulated birth stays consistent. Another needed principle is “not compromise the clinical condition or the safety of patients, or the safety and health of users” [69]. For this, tests can be run that simulate many different situations of births requiring AVD device usage. Additionally, user testing where the device is used in risky situations, that may occur, can help inform safety and health of users. More information on the full process for registering a medical device can be found in the document titled “Guideline For Registration Of Medical Device” by the Ghana Food and Drugs Authority [69].

Appendix E: Project Plan

Our project plan for the semester was broken into 4 time frames corresponding to the 4 major design reviews. Each time frame is presented as a Gantt Chart with the task, task owner, and timeframe for the task labeled. The general layout of each Gantt Chart is 3 groups of rows each separated by a black line. The first of these groups are meetings (in the top rows), then project tasks in the middle rows, and finally class specific tasks in the bottom rows. Task owners are primarily "Team" or "Equally Split". "Team" is reserved for activities that will be done as a team such as meetings, events, or full group discussions of major topics. "Equally Split" means that all team members will have an equal role in this task. The main tasks assigned "Equally Split" are presentations and reports as we divide them between the team as evenly as possible. The following sections' Gantt Charts represent what the team did during the semester.

Beginning to DR 1

During the DR 1 time frame (Weeks 1-6) our primary focuses were information gathering and problem definition. The majority of our group came in with minimal to no experience in the medical or OBGYN world, with the exception being that one member of the group was present on the 2025 Global Health Design Initiative Program. We met our sponsor and reached out to our first contact based in Ghana given to us by our sponsor. We never heard back from this contact, setting us back while many of the other groups in our section were meeting with their contact. After a week, we received a new contact and at our meeting, we gained information that was helpful to our understanding of the project and the need motivating our design problem. The majority of our time during the DR 1 time frame was spent coming up with and refining our requirements and specifications. Our full project plan for the DR 1 timeline is presented in *Figure E.1*.

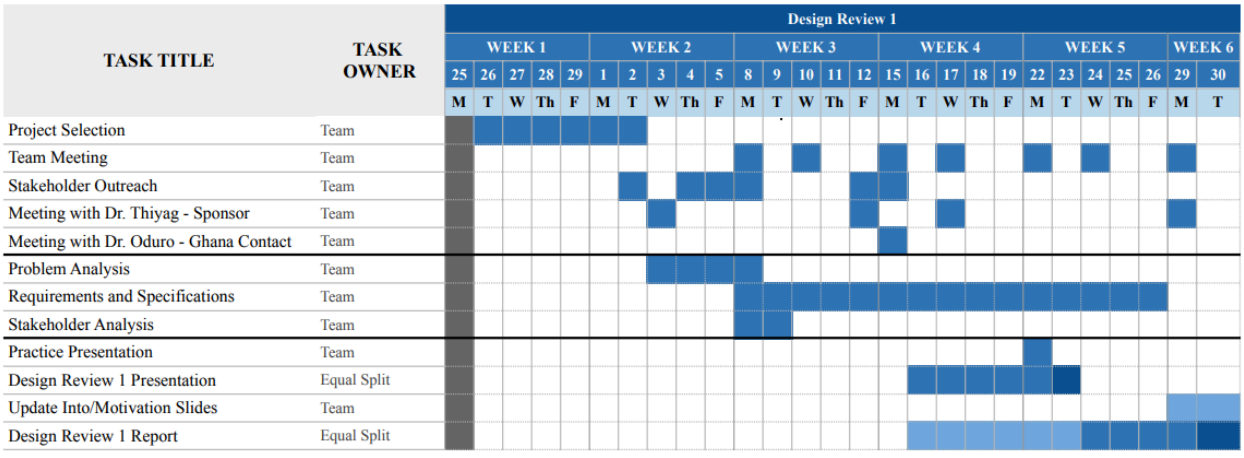

Figure E.1. Project plan up to the DR 1 report due date. Dark hued cells are due, or important, dates. Medium hued cells are for meetings and set dates for the relevant tasks. Light colored are flexible dates.

After DR 1 to DR 2

During the DR 2 time frame (Weeks 6-9) our primary focus was on concept generation, concept evaluation, and choosing a selected design. One challenge during the DR 2 time block was removing preconceived notions and existing designs and coming up with a novel design for a new AVD device. Many of us have minor or no prior experience with assisted vaginal delivery devices, or OBGYN in general, meaning our only exposure has been the existing devices. During one of our discussion times, we participated in a brainwriting activity as a team where we encouraged wild ideas that helped us think outside the box. The planned out time for stakeholder feedback on our design was important in assessing the feasibility and novelty of our generated designs. Feedback from our sponsor on our first selected design was delayed until after the DR 2 presentation due to conflicting schedules. This led to us pursuing a design that we found to be feasible and novel, but in reality was not a valid option due to safety concerns. The newfound need to iterate back to concept generation and evaluation during DR 3 means that design finalization and booking simulation time have been rescheduled to the DR 3 time frame. Another key event that happened in this time block was Anya and Chelsea observing at the obstetrics department in the University of Michigan hospital during Week 8. We hoped that during this time, we would be able to observe a birth, specifically a birth where an assistive vaginal delivery device is used. In reality, we did not see an AVD being used, but we did have the opportunity to handle the AVD devices being used at the hospital and both observed an unassisted vaginal birth. Additionally, this experience allowed us to ask questions to doctors and midwives, get feedback on our selected design, and gave us firsthand insight into the speed and workings of a hospital obstetrics unit. Our full project plan for the DR 2 timeline is presented in *Figure E.2*.

TASK TITLE	TASK OWNER	Design Review 2														
		WEEK 6			WEEK 7					WEEK 8					WEEK 9	
		1	2	3	6	7	8	9	10	13	14	15	16	17	20	21
		W	Th	F	M	T	W	Th	F	M	T	W	Th	F	M	T
Team Meeting	Team															
Meeting with Dr. Thiyag - Sponsor	Team															
Meeting with Dr. Oduro - Ghana Contact	Team															
Concept Generation	Team															
Concept Evaluation (Pick a Design)	Team															
Preliminary Engineering Analysis	Team															
~~Reach Out to Book Simulation at UMMS~~	~~Team~~	Rescheduled to DR 3														
~~Design Finalization (Drawings and CAD)~~	~~Team~~															
Stakeholder Feedback on Design	Team															
Practice Presentation	Team															
Design Review 2 Presentation	Equal Split															
Hospital Visit	Anya+Chelsea															
Design Review 2 Report	Equal Split															

Figure E.2. Project plan from DR 1 to the DR 2 report due date. Dark hued cells are due, or important, dates. Medium hued cells are for meetings and set dates. Light colored are flexible dates.

After DR 2 to DR 3

During the DR 3 time frame (Weeks 9-12) our primary focuses were on iterating back to the concept evaluation and engineering analysis phase, moving onto design finalization (including CAD), planning for verification/validation/budgeting, and starting physically prototyping/building of the design. Having to iterate on our design sets us back from where we had planned to be at the end of the DR 2, however, we made sure to create a solid plan and broke up tasks early to try and get back on track. One anticipated challenge, moved from DR 2 to here, is being able to test our device in the situation it would be used in. We have been informed by our sponsor that there is a birthing simulator at the University of Michigan Medical School (UMMS) that we could use [3]. We will not be testing our device until the DR 4 time block, due to our timeline for verification/validation of our user requirements and engineering specification. However, during the DR 3 block, we figured out the system for scheduling time in advance to make sure we have a slot when it is time. A time frame for the budgeting of our design was included because while affordability (Low Cost) is a low priority requirement for our design, it still needs to be considered due to the social context around our device's use in LMICs. A time for budgeting will allow us to estimate what we think our design will cost and allow us to make changes if needed to ensure that we can buy the necessary materials for our build design and the cost specification can be met. Regular meetings with our sponsor and the occasional check in with other stakeholders were scheduled to make sure that our team stays aligned with their wants and needs, especially as we are verifying our new design with them. Our full project plan for the DR 3 timeline is presented in *Figure E.3*.

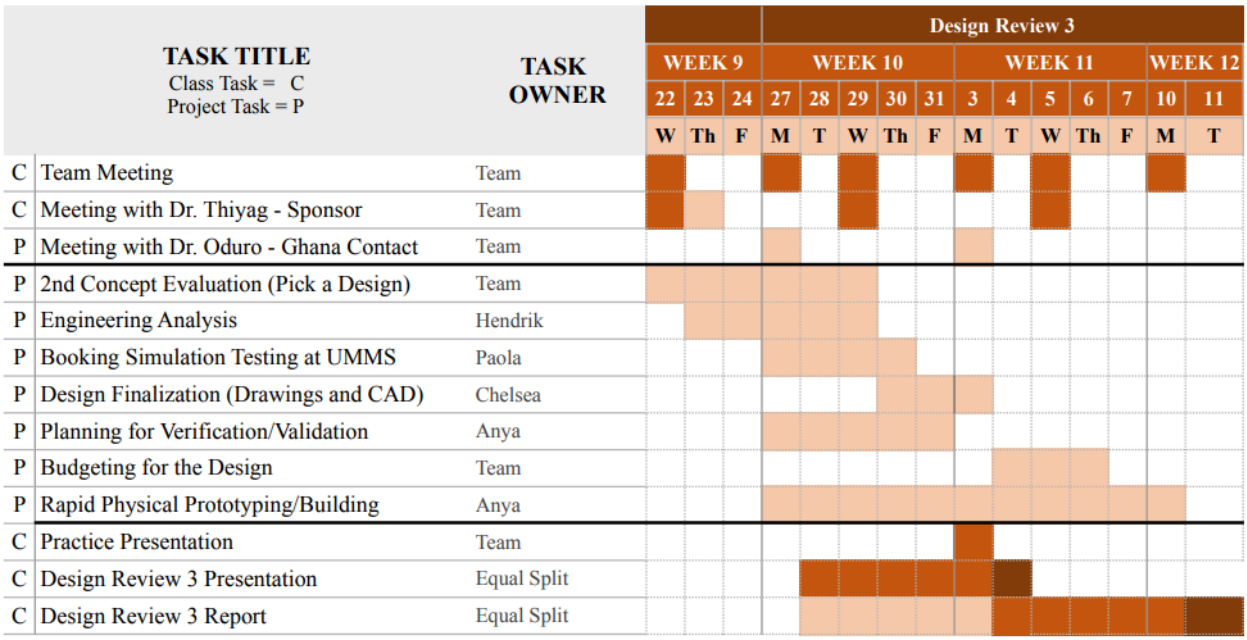

Figure E.3. Project plan from DR 2 to the DR 3 report due date. Dark hued cells are due, or important, dates. Medium hued cells are for meetings and set dates. Light colored are flexible dates.

After DR 3 to End of Semester

During the DR 4/Final Report time frame (Weeks 12-17) our primary focuses were finishing the building of our device then starting testing to verify our high priority engineering requirements. Additionally, we worked on the finalization required for handing off our design at the end of the semester. We were able to verify (pass or fail) the majority of our high priority engineering specifications, however, we encountered some that we could not due to the building of our device not being completed. We were able to rent a force sensor from the X50 lab space and undergraduate machine shop. Meetings with our sponsor slowed down during the end of the project however we were in contact over email to ensure a smooth transition after this semester. Our full project plan for the DR 4/Final Report timeline is presented in *Figure E.4*.

	TASK TITLE Class Task = C Project Task = P	TASK OWNER	Design Review 4 and Final Report																								
			WEEK 12			WEEK 13					WEEK 14					WEEK 15					WEEK 16					WEEK 17		
			12	13	14	17	18	19	20	21	24	25	26	27	28	1	2	3	4	5	8	9	10	11	12	15	16	17
			W	Th	F	M	T	W	Th	F	M	T	W	Th	F	M	T	W	Th	F	M	T	W	Th	F	M	T	W
C	Team Meeting	Team																									
C	Meeting with Dr. Thiyag - Sponsor	Team																									
P	Meeting with Dr. Oduro - Ghana Contact	Team																									
P	Physical Prototyping/Building	Equal Split																									
P	Design Iterations	Team																									
P	Simulation Testing at UMMS	Team																									
P	Verification Tests (Safety and Easy to Use)	Team																									
P	~~Verification Tests (Birthing Sim. & Proxy Users) (1-2/7)~~	~~TBD~~	Not Attempted Due to Incomplete Build																								
P	Verification of Use Cycles Specification (1/7)	Paola																									
P	~~Reaching Out To Coordinate Validation Plan~~	~~Team~~	Not Attempted Due to Time Constraints																								
P	~~Validation of User and Patient Satisfaction~~	~~TBD~~																									
C	Practice Presentation	Team																									
C	Design Review 4 Presentation	Equal Split																									
C	Presentation Revisions and Poster Finalization	Team																									
C	Poster Printing	Paola																									
C	Design Expo	Team																									
C	Planning for Design Hand off and Continuation	Team																									
C	Final Report	Equal Split																									

Figure E.4. Project plan from end of DR 3 to the end of the semester. Dark hued cells are due, or important, dates. Medium hued cells are for meetings and set dates. Light colored are flexible dates.

Appendix F: Build Design Bill of Materials

Table F.1a. Descriptions of all parts used in our final build design delivered to our sponsor.

Item	Qty	Source	Catalog Number	Cost Per Unit	Cost Per Device	Contact	Notes
Shoulder Screw	1	McMaster-Carr	91259A166	$2.81	$2.81	mcmaster.com	1/2” shoulder L, 3/16” thread L
Compression Spring	1	McMaster-Carr	2006N387	$6.275	$6.275	mcmaster.com	59.1 mm L & 24 mm OD, cut to 33.5 mm L
Extension Spring	1	McMaster-Carr	3630N454	$13.50	$13.50	mcmaster.com	127 mm L & 36 mm OD
0.04” Aluminum Bar	2	McMaster-Carr	89015K45	$11.29	$6.25	mcmaster.com	AA6061 2’ x 2” x 0.04” Used to manufacture claw prongs (5), claw connector (1), and drawstring spacer (1)
3 mm Aluminum Bar	1	McMaster-Carr	9146T26	$12.49	$0.21	mcmaster.com	AA6061 3’ x 40 mm x 3 mm Used to make spacers (2) for the shoulder screw
1.5 mm Diameter Cord	1	Amazon	B07L24H3YK	$15.99	$0.69	amazon.com	175 yds. Used 7.583 yds. Polyester Waxed Cord
4-40 Thread Screw	1	X50 Supplies Similar one on McMaster-Carr	- Similar: #92949A110	- Similar: $0.043	- Similar: $0.043	- mcmaster.com	Phillips Head, 0.5” length.
Handle	1	3D-Print	-	$25/kg	$8.78	Undergraduate Machine Shop	0.351 kg
Claw Tube	1	3D-Print	-	$25/kg	$24.88	Undergraduate Machine Shop	0.995 kg Upper and Lower due to print volume
Outer Tube and Cone	1	3D-Print	-	$25/kg	$14.17	Undergraduate Machine Shop	0.567 kg Upper and lower due to print volume

Table F.1b. *Table F.1a* continued

Item	Qty	Source	Catalog Number	Cost Per Unit	Cost Per Device	Contact	Notes
Claw Tips Regular	4	3D-Print	-	$25/kg	$0.39	Undergraduate Machine Shop	0.0039 kg
Claw Tips Additional Holes	1	3D-Print	-	$25/kg	$0.09	Undergraduate Machine Shop	0.0037 kg
Drawstring Top	1	3D-Print	-	$25/kg	$0.30	Undergraduate Machine Shop	0.012 kg
Drawstring Bottom	1	3D-Print	-	$25/kg	$0.63	Undergraduate Machine Shop	0.025 kg
Hot Glue Stick	1	X50 Supplies Similar one on Amazon	- Similar: B06X1CZWC5	- Similar: $0.22	- Similar: $0.22	- Similar: amazon.com	Used less than one stick to attach the claws

For parts made from Aluminum Bar, the cost per device was found by finding a cost/area of the bar and then multiplying by the total area used. The parts that the bar was used for can be found in the notes column. For 3-D printed parts, the mass was found through taking the volume of the part from Solidworks and then multiplying by 1.24 g/cm^3 [70]. We then found the price by multiplying by an average PLA filament price of $25/kg [71]. This price for 3-D printed parts assumes that the infill is 100%, which may be an overestimate of the build design. The total price per device is approximately $79.24.

Appendix G: Build Design Fabrication Plan

Manufacturing Plans

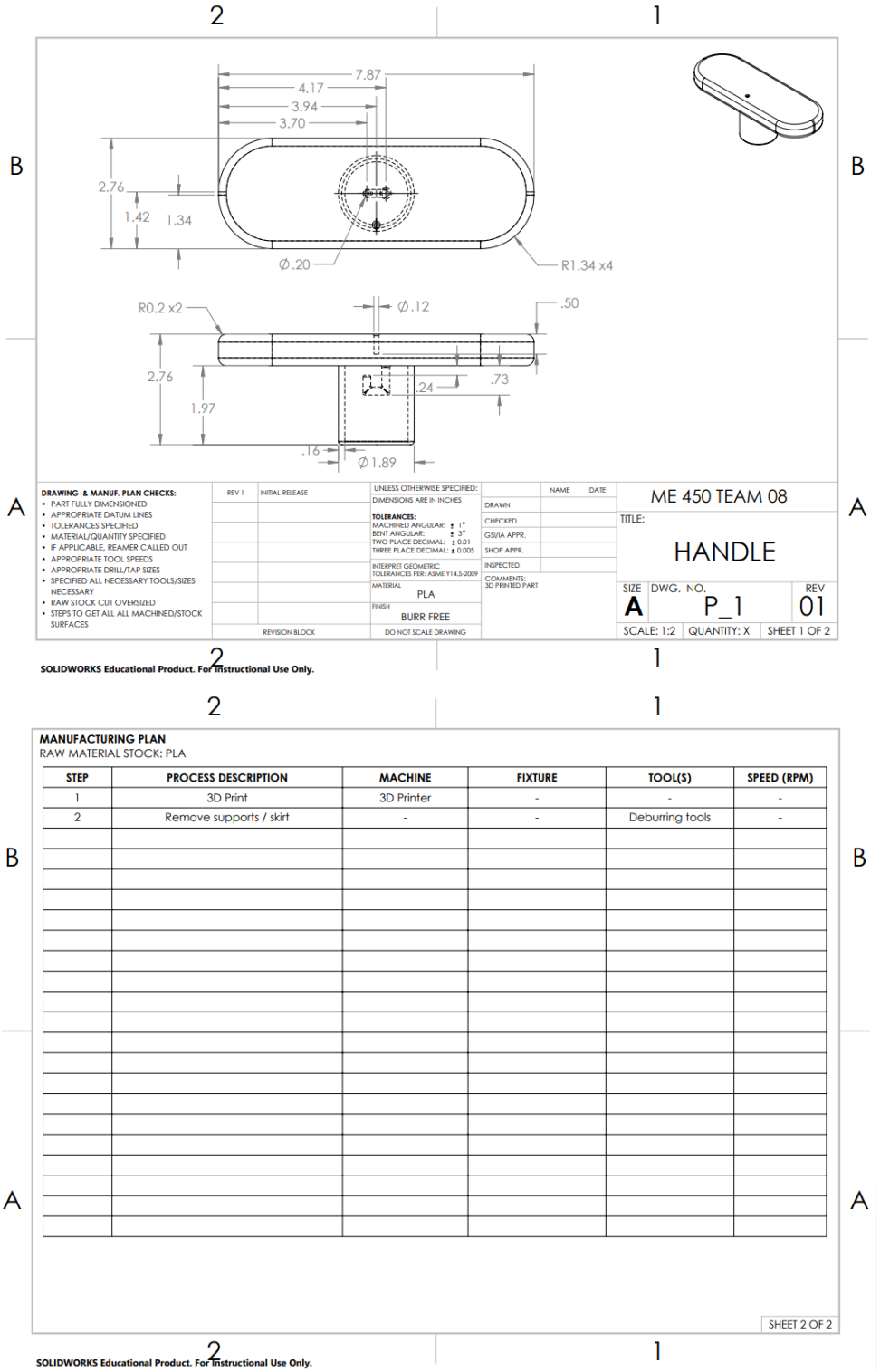

Figure G.1 Handle manufacturing plan

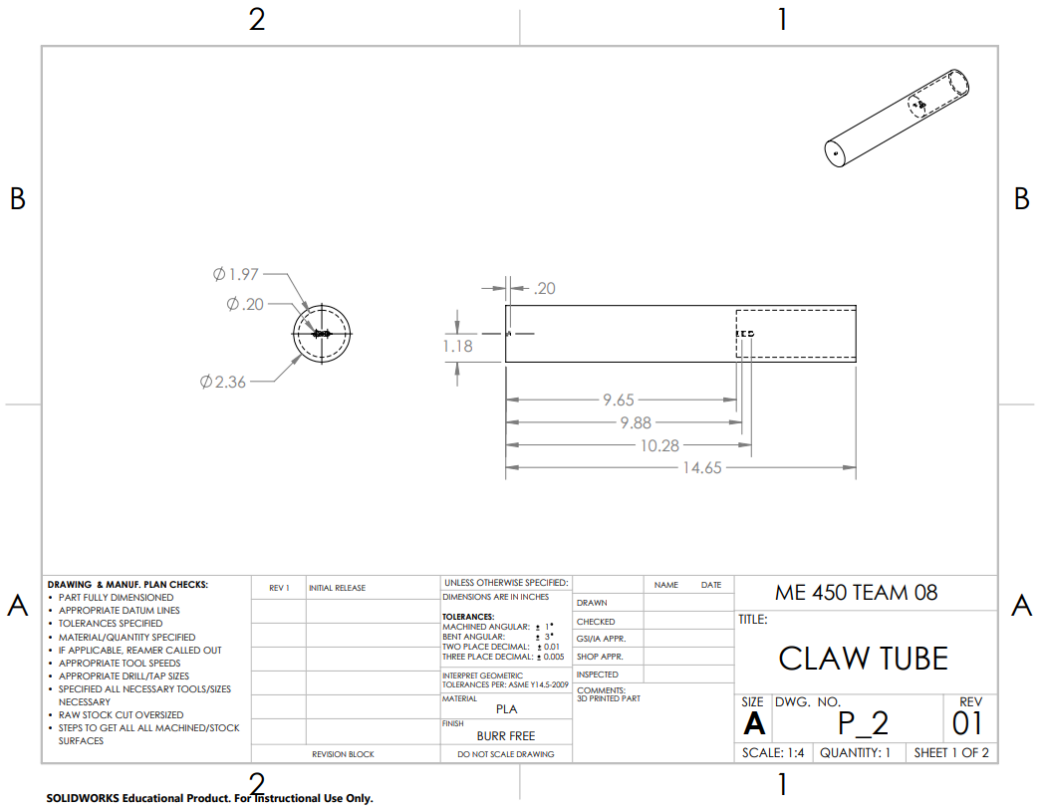

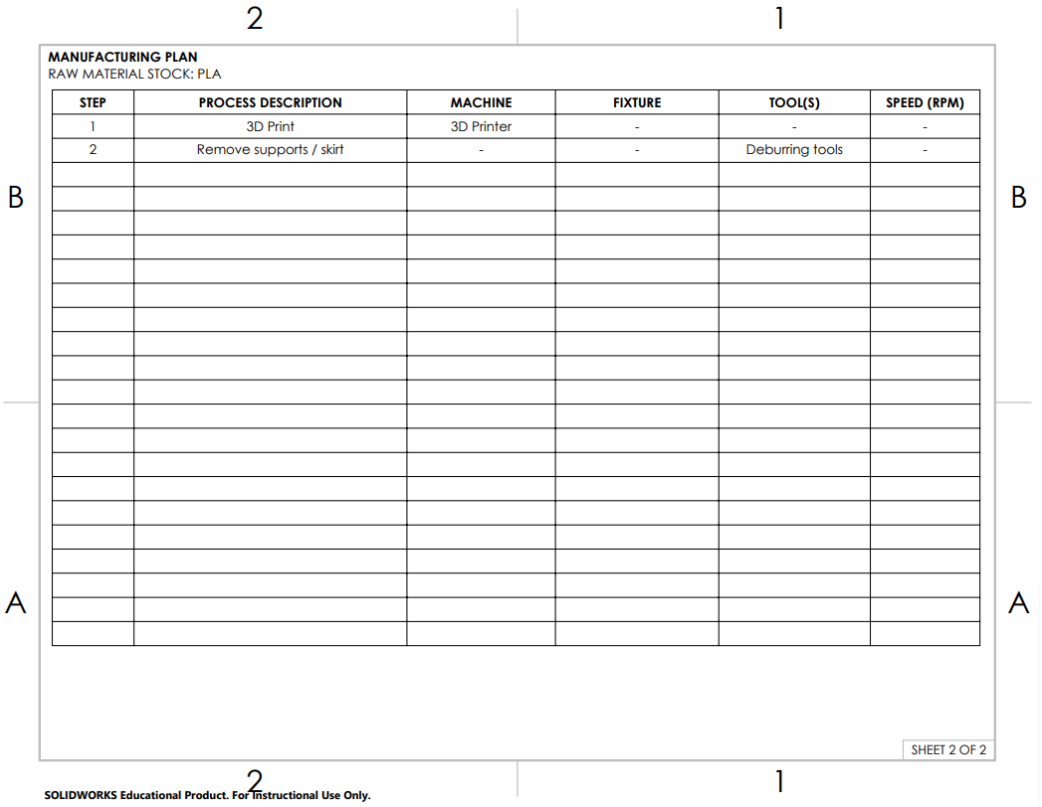

Figure G.2 Claw tube manufacturing plan

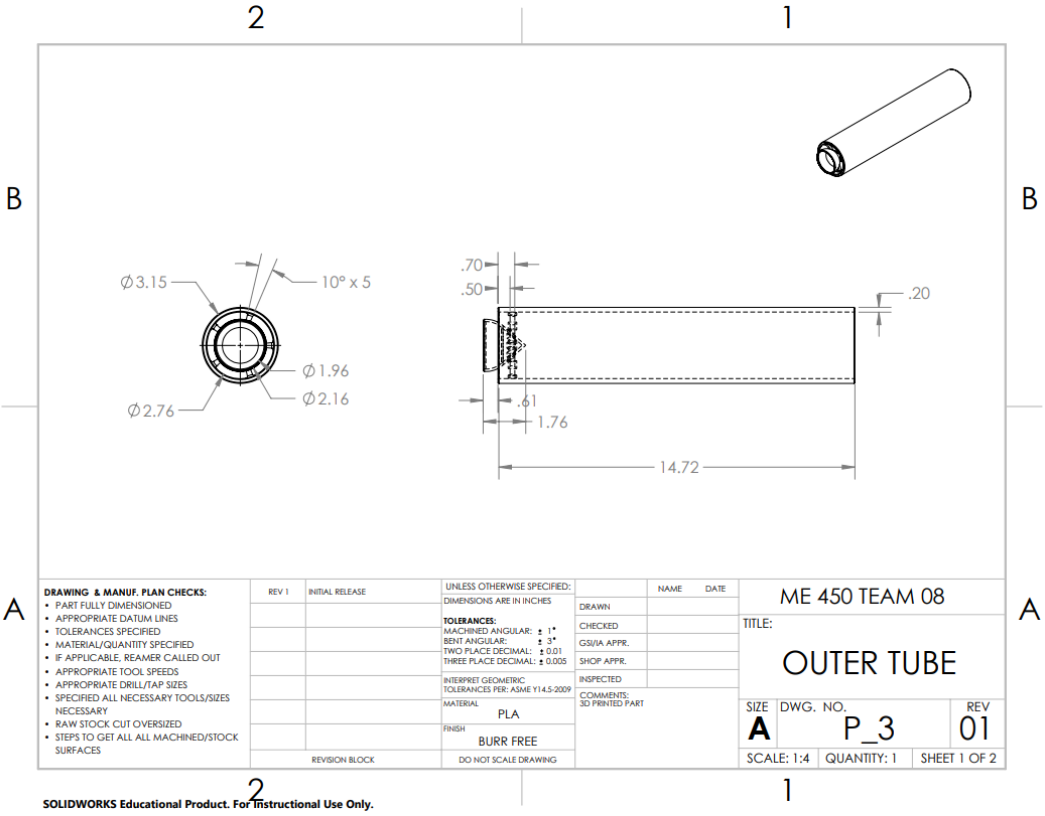

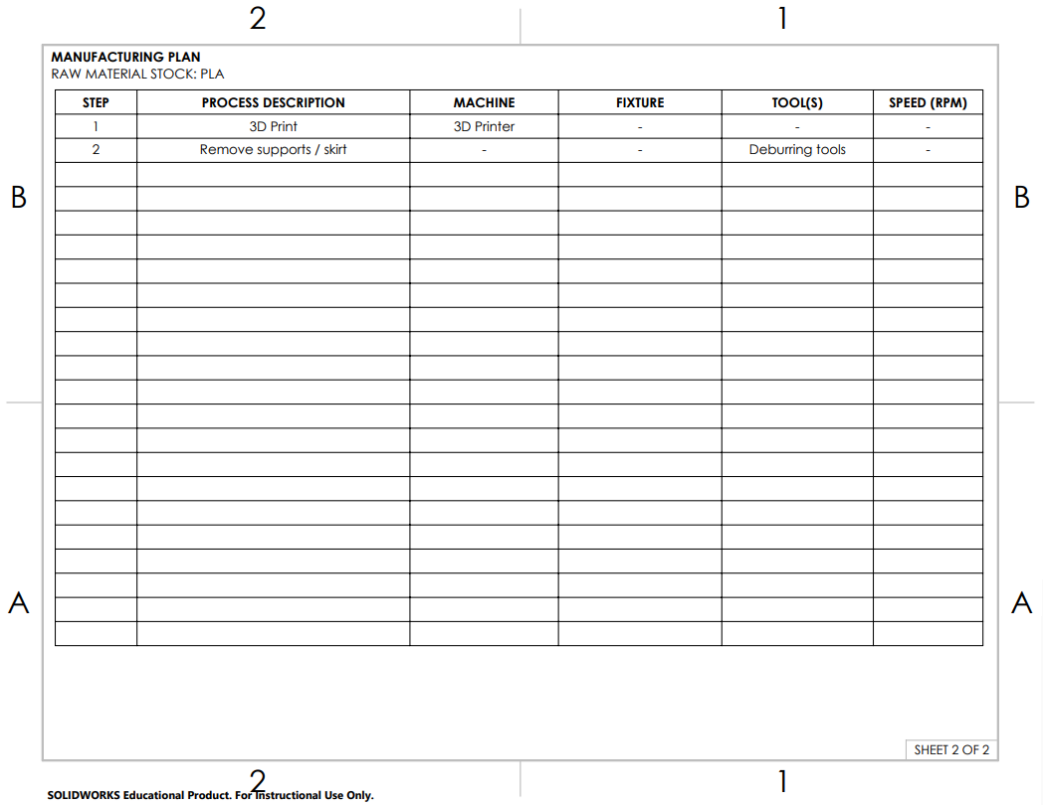

Figure G.3 Outer tube and cone manufacturing plan

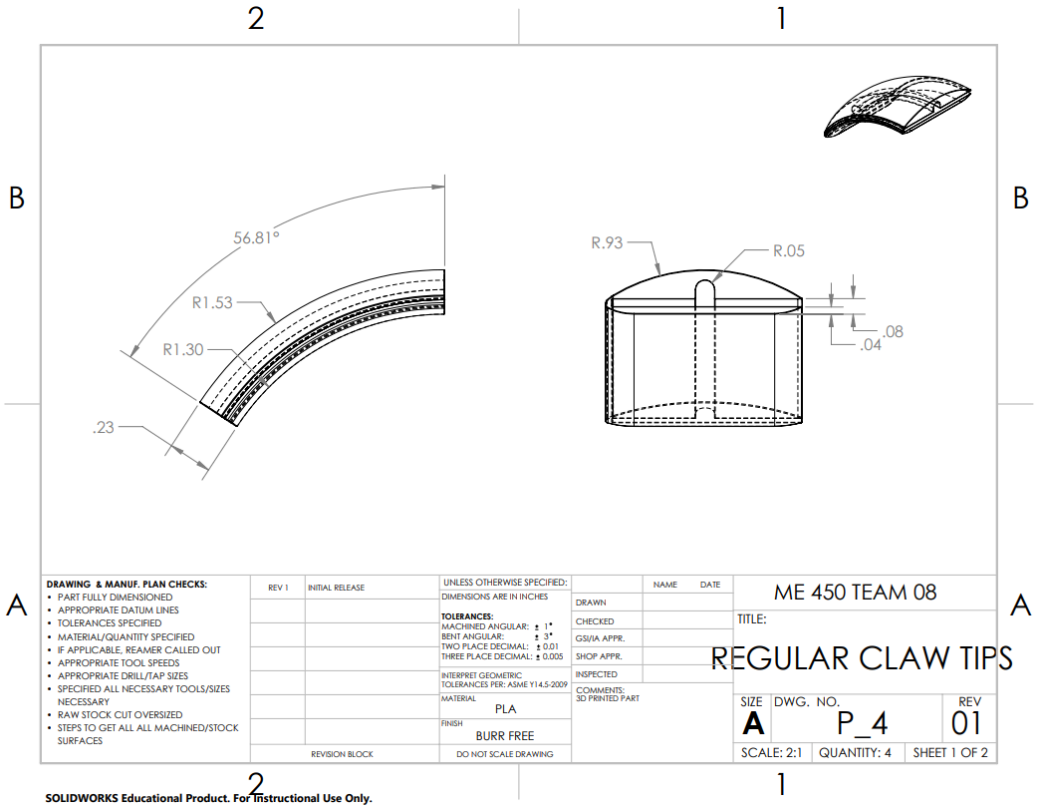

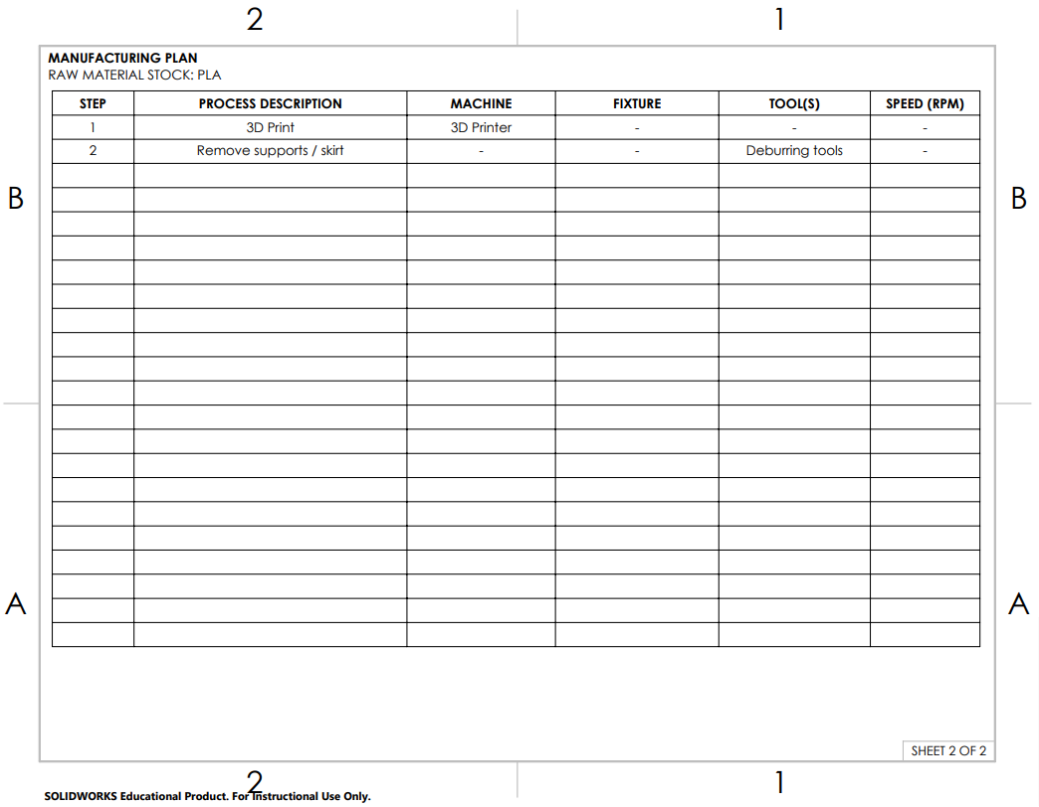

Figure G.4 Regular claw tips manufacturing plan

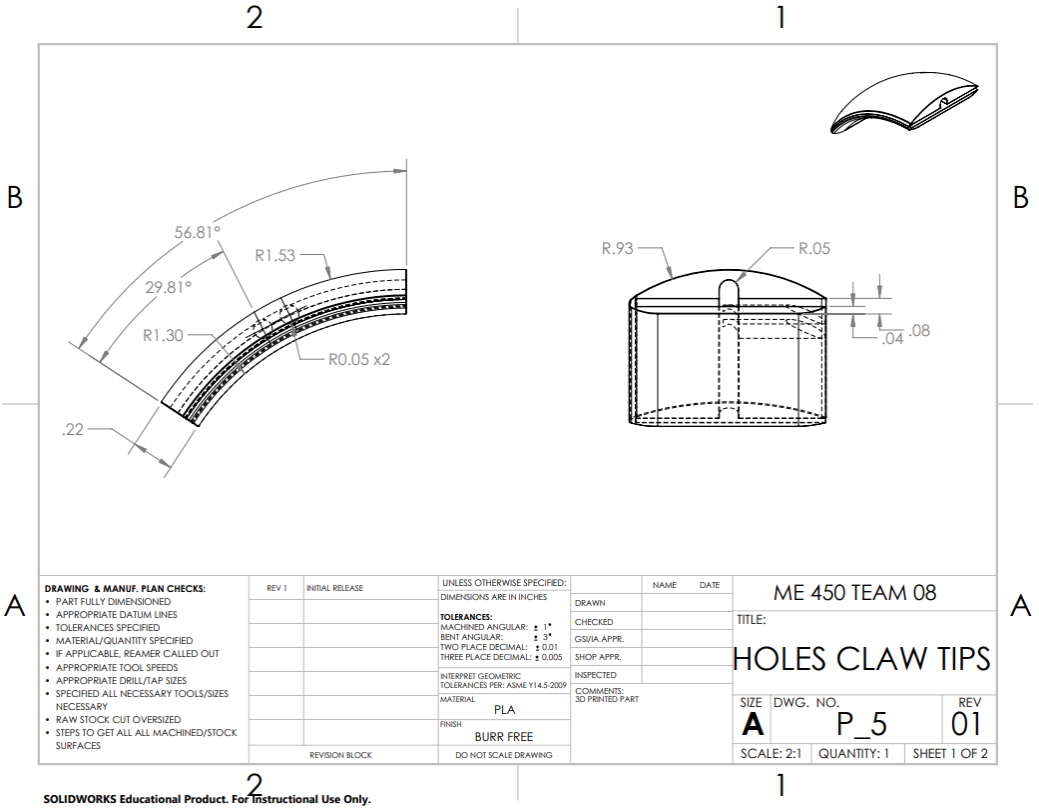

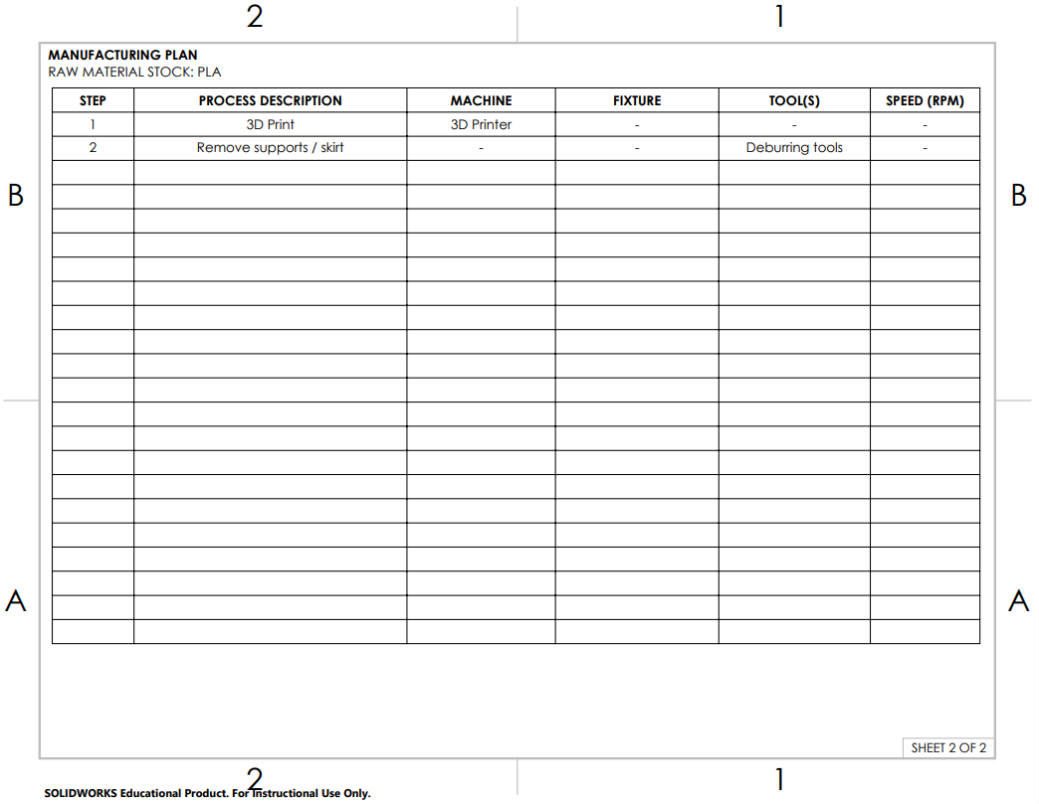

Figure G.5 Additional holes claw tips manufacturing plan

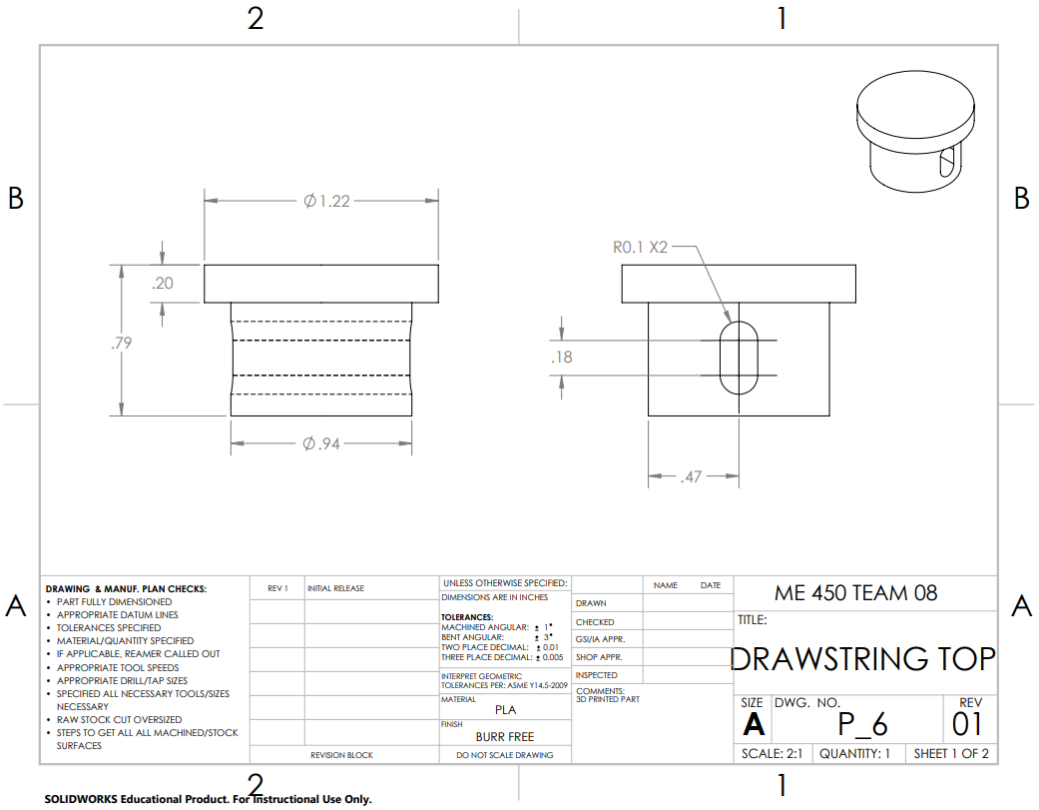

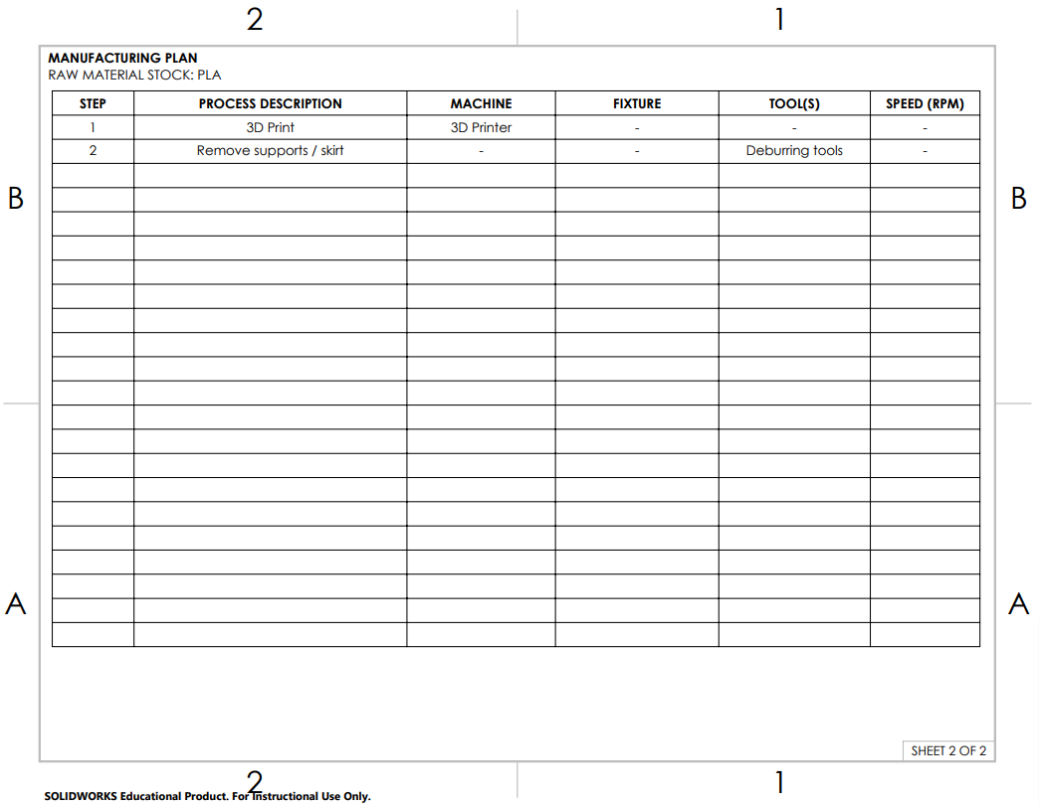

Figure G.6 Drawstring top manufacturing plan

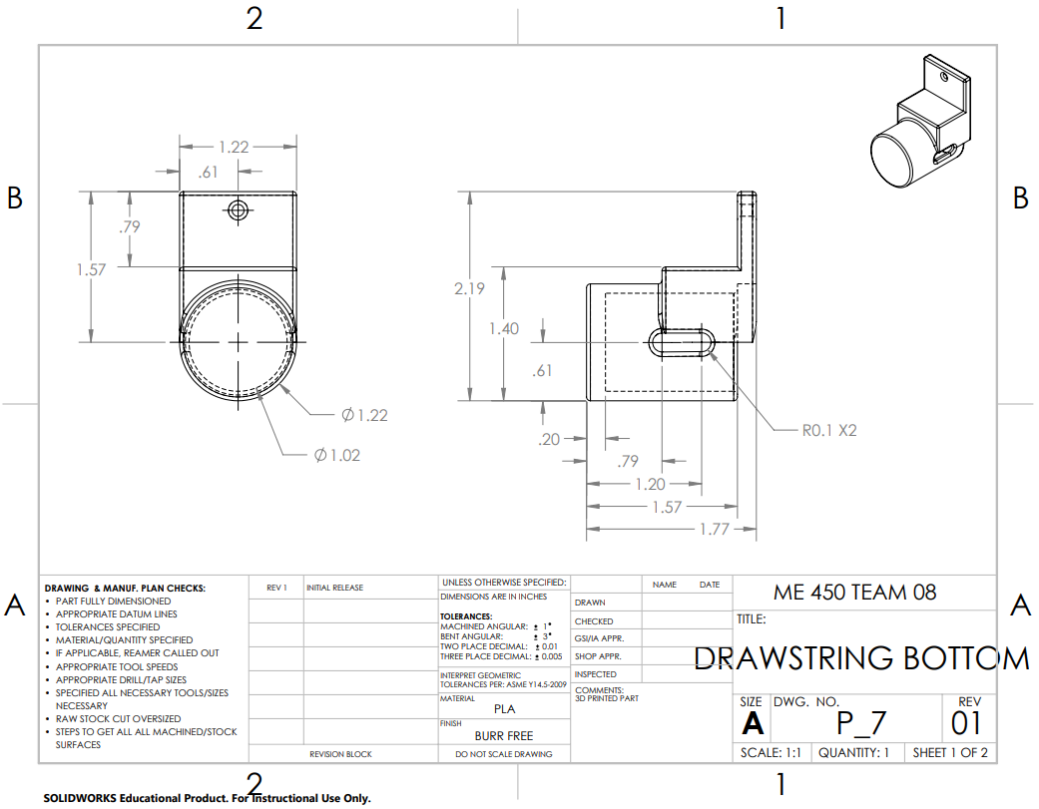

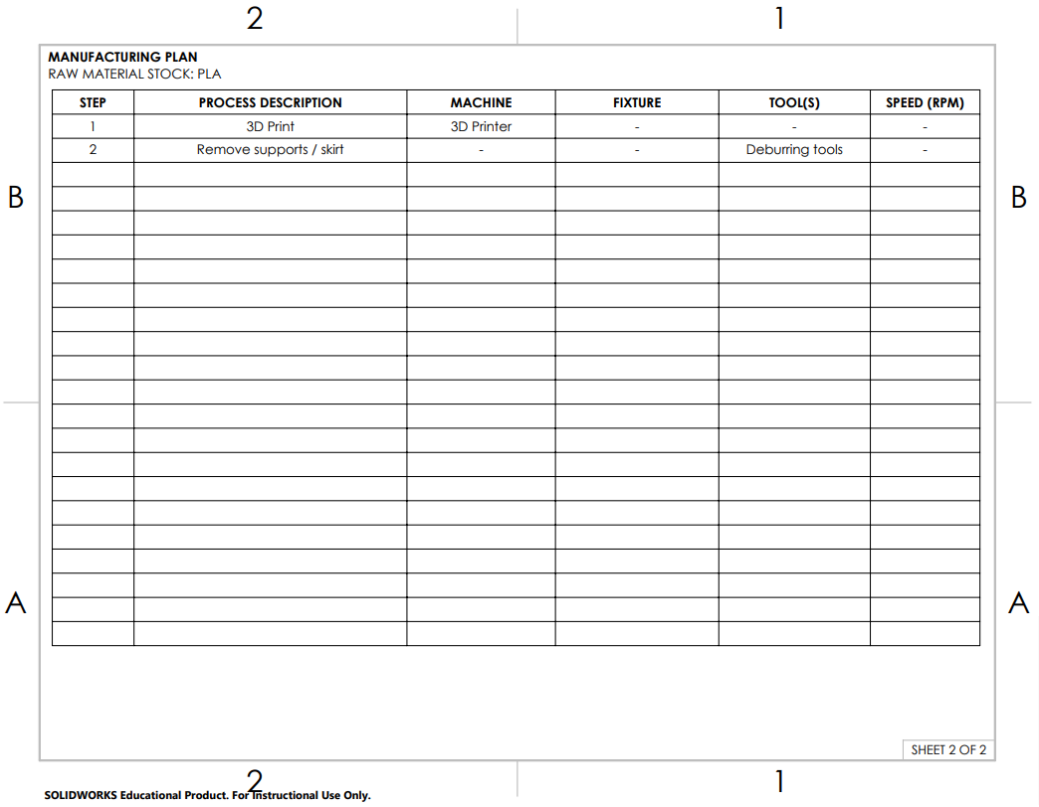

Figure G.7 Drawstring bottom manufacturing plan

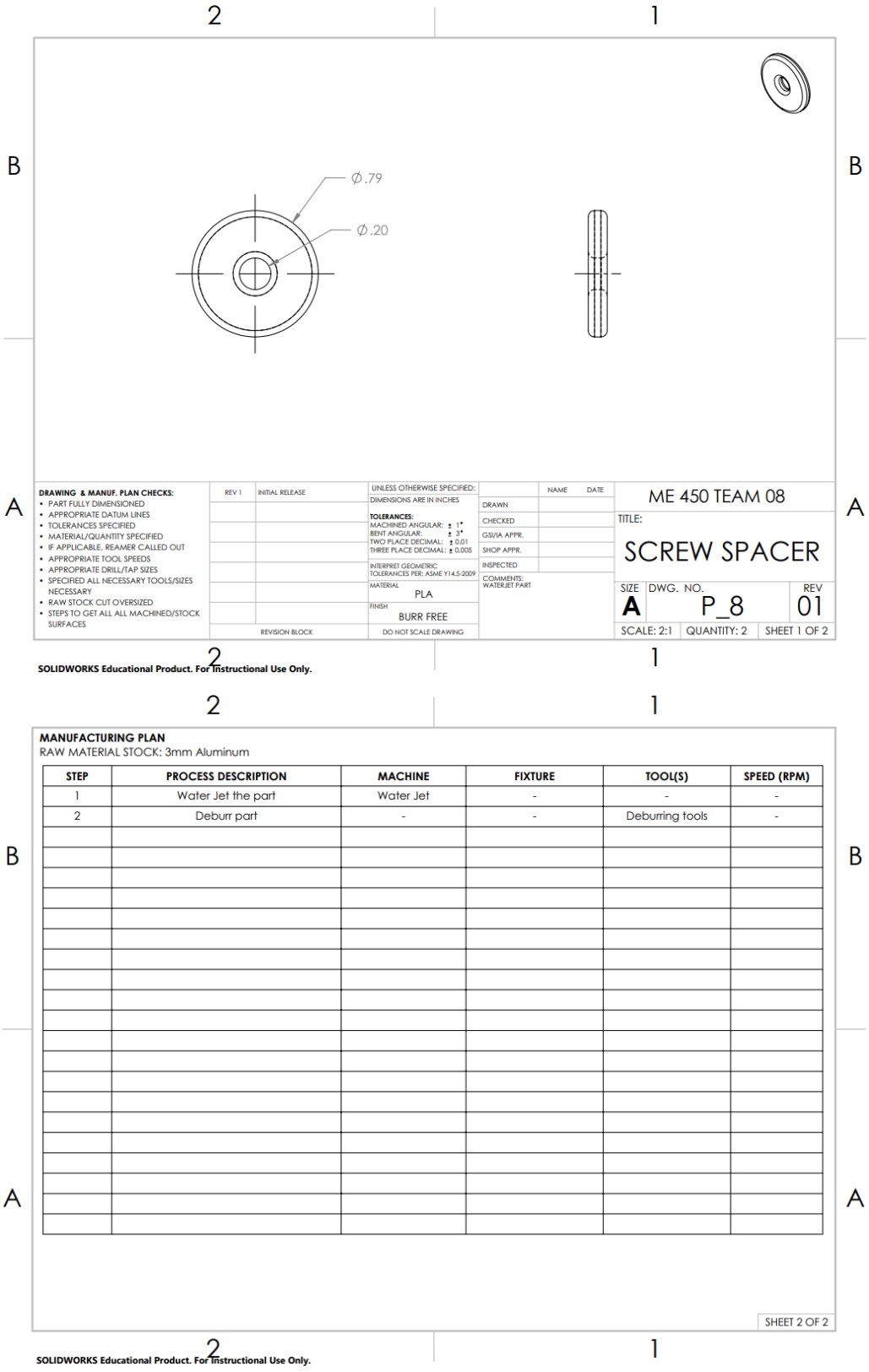

Figure G.8 Shoulder screw spacer manufacturing plan

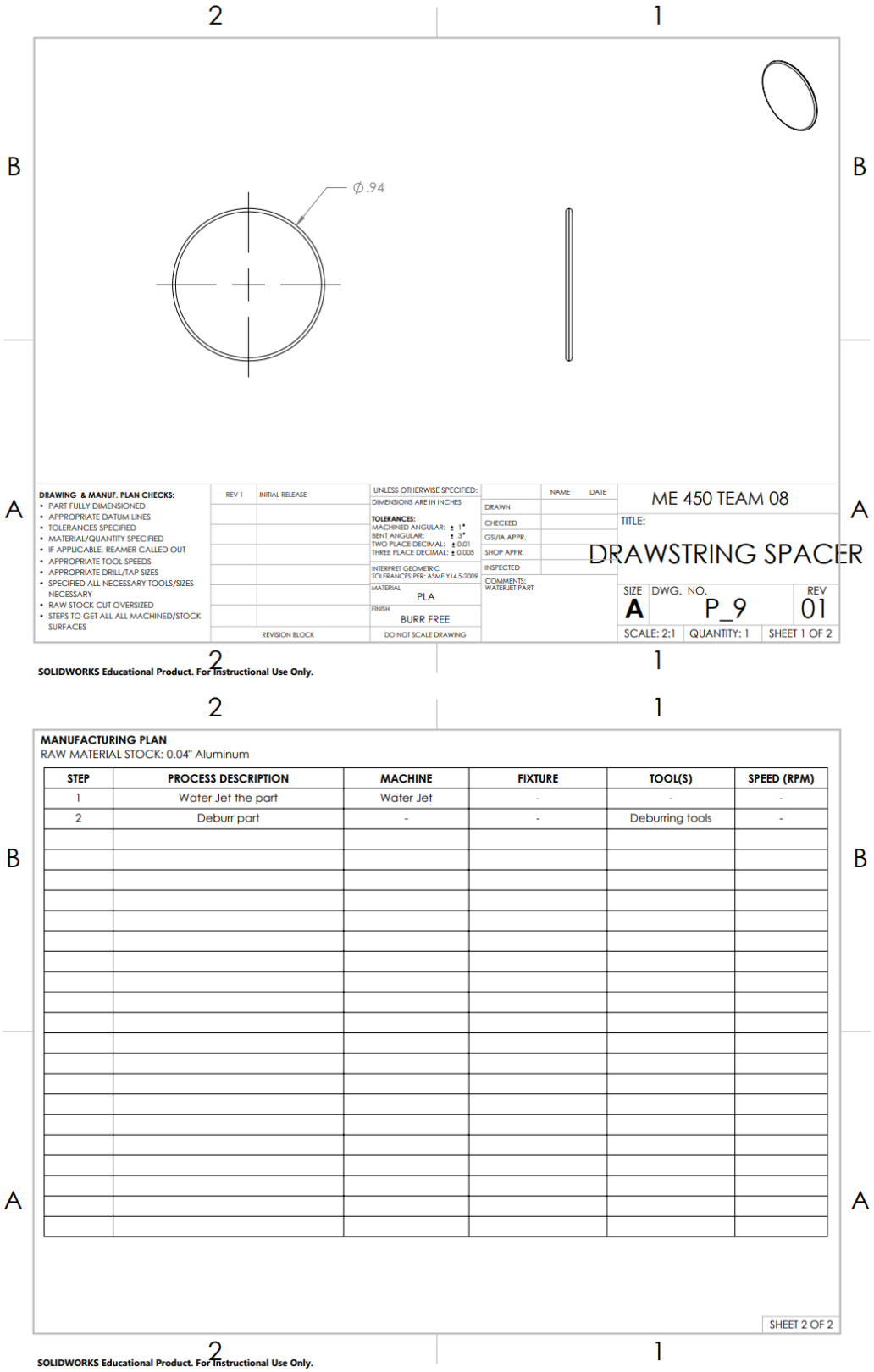

Figure G.9 Drawstring spacer manufacturing plan

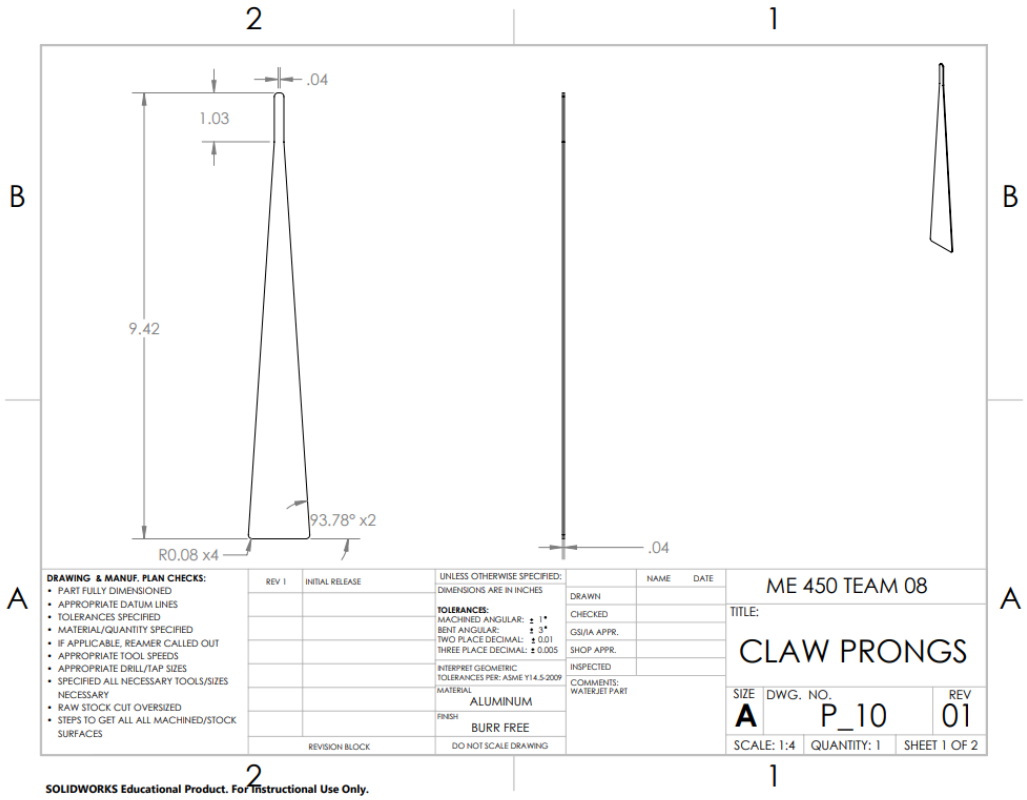

MANUFACTURING PLAN

RAW MATERIAL STOCK: 3mm Aluminum

STEP	PROCESS DESCRIPTION	MACHINE	FIXTURE	TOOL(S)	SPEED (RPM)
1	Water Jet the part, 5 prongs total	Water Jet	-	-	-
2	Deburr part	-	-	Deburring tools	-
3	Bend the claw prong tabs 180 degrees	Press Brake	-	-	

SHEET 2 OF 2

SOLIDWORKS Educational Product. For Instructional Use Only.

Figure G.10 Claw prongs manufacturing plan

Table G.1 Additional parts and manufacturing plans

Part	Qty	Tools Used	Manufacturing Description
Compression Spring	1	Circular Saw	Measure 33.5 mm length of the compression spring and cut off the excess spring length
1.5 mm Diameter Cord	1	Scissors	Measure 7.583 yards of cord material and use scissors to cut

Assembly Plans

1. Insert the 5 claw prong tabs into the claw connector.

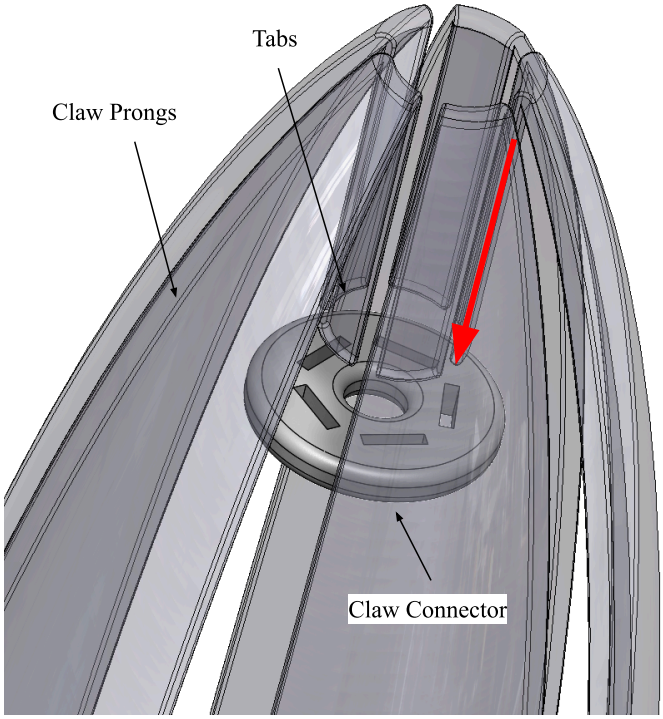

Figure G.11 Attachment of 5 claw prongs to the claw connector

2. Join the claw prongs to the claw tube using the following assembly order:
    a. Shoulder screw (McMaster-Carr #91259A166), claw prongs/claw connector, two shoulder screw spacers, claw tube.

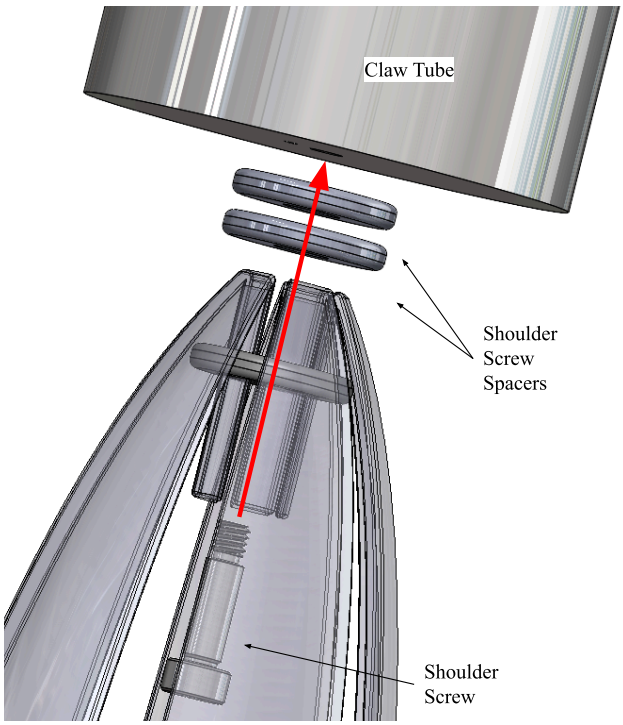

Figure G.12 Attachment of the claw prongs to the claw tube

3. Join the drawstring bottom part to the handle using a 4-40 Thread Screw (McMaster-Carr #92949A110).

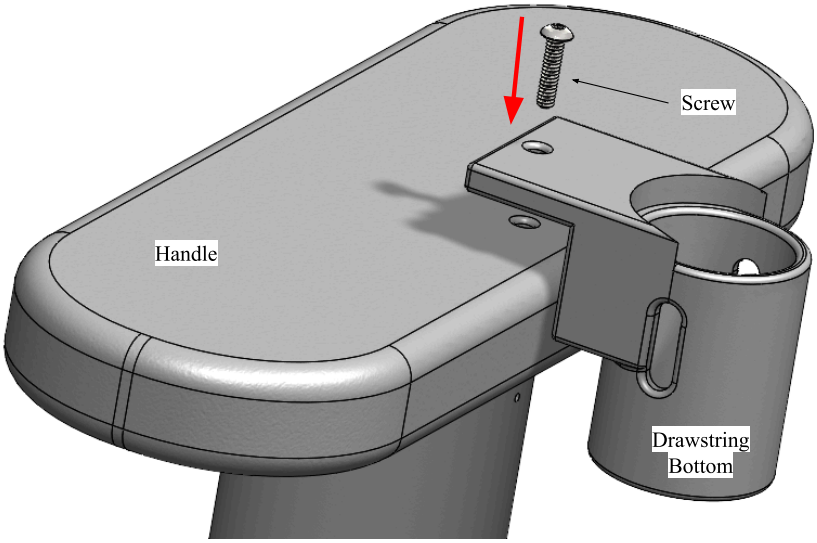

Figure G.13 Attachment of the drawstring bottom with the handle

4. Assemble the drawstring mechanism using the following assembly order:
    a. Drawstring bottom, compression spring (McMaster-Carr #2006N387), drawstring spacer, drawstring top.
    b. For extra adhesion, epoxy may be used to join the compression spring and the drawstring spacer, but it is not needed.

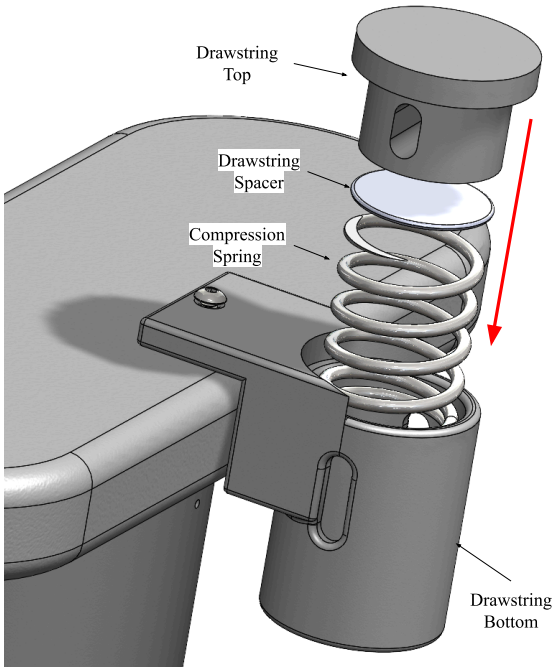

Figure G.14 Assembly of the drawstring mechanism

5. Compress the spring by applying force to the drawstring top until a hole becomes visible through the drawstring bottom. Insert both ends of the cord (Amazon #B07L24H3YK) through the hole approximately 100 mm (enough to grab the cord), then release the force.

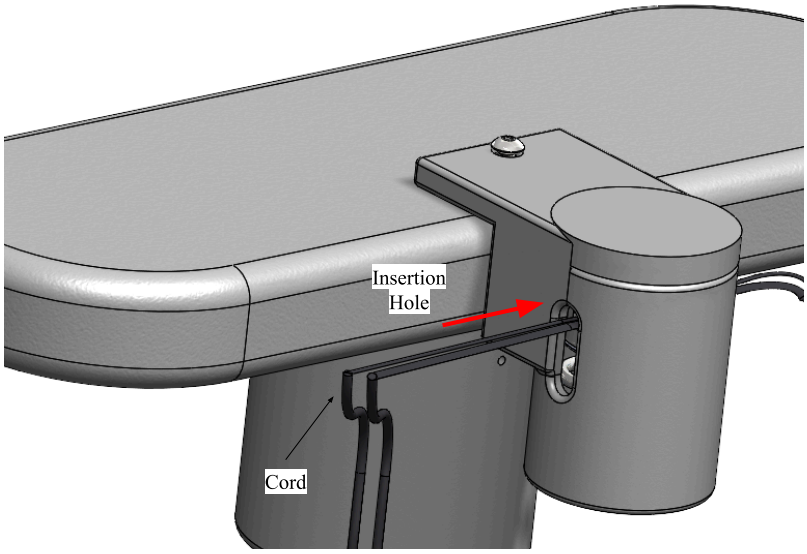

Figure G.15 Insertion of the cord into the drawstring mechanism

6. Attach the extension spring (McMaster #3630N454) to the hooks on the inside of the handle and the claw tube.
    a. For extra adhesion, epoxy may be used to join the extension spring, the claw tube, and the handle, but it is not needed.

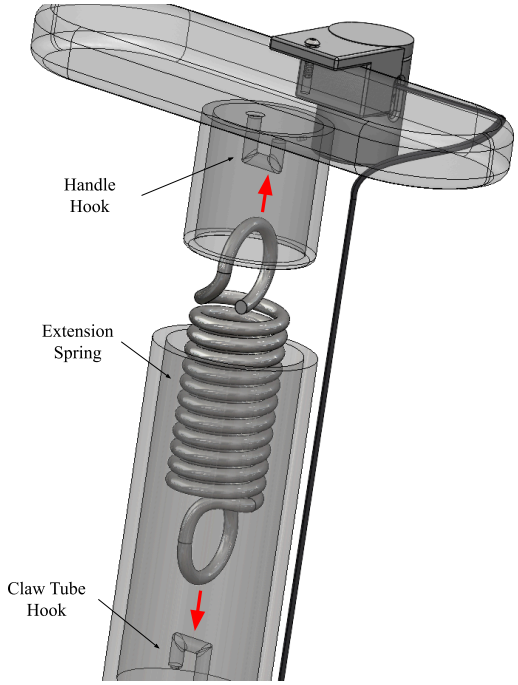

Figure G.16 Attachment of the extension spring to the claw tube and handle hooks.

7. Slide the assembled inner claw tube into the outer tube and cone part. Pliers or other tools may be used to help pull the claw prongs through the other end of the outer tube. One claw prong in between each protruding notch.

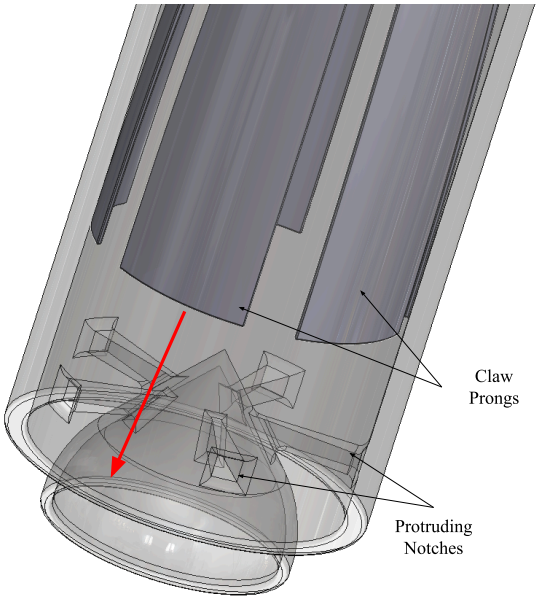

Figure G.17 Insertion of the claw prongs into the outer claw tube and cone part.

8. Slide the looped end of the cord through the outer tube and cone part. Insert the cord through all four of the regular claw tips and one of the claw tips with extra holes. The location in which the looped cord was inserted through the outer tube is where the claw tips with extra holes will be attached to the claw prongs. Attach the rest of the claw tips to the claw prongs.
    a. If a gap is present between the top of the claw tips and the claw prongs due to manufacturing tolerances, hot glue can be used to close the gap.

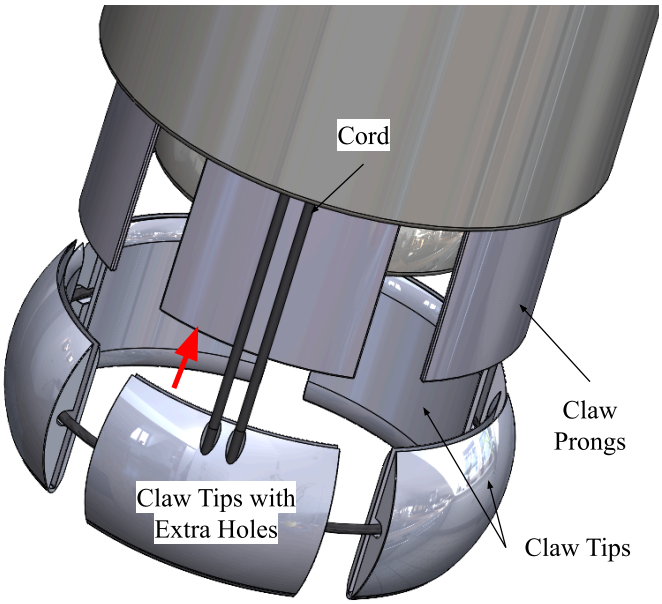

Figure G.18 Attachment of the claw tips to the claw prongs.

Team Member Bios

Chelsea Harvey

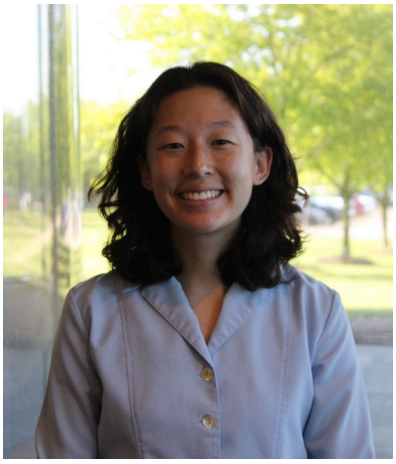

I grew up in Macomb, Michigan, which is part of the Metro Detroit area. One of my favorite movies growing up was *Dolphin Tale*, a story about a dolphin named Winter who had their tail amputated and later received a custom prosthetic. The innovative and creative problem solving behind Winter's prosthetic tail was what sparked my interest in engineering, and gave me the idea that I could make a positive impact on others around me. I had the opportunity to join my high school's career readiness program, and I chose the engineering path. This course pathway gave me a hands-on introduction to engineering and designing, and further validated my passion towards engineering. Currently, I am a senior in mechanical engineering at the University of Michigan, with an expected graduation in May 2026. My favorite courses thus far have been the project design classes, including designing a robotic machine player for an asteroids inspired game. I've enjoyed working with a team of engineers to design, build, and test our creation, and seeing our vision for a robot come to life. My plans after graduating are to pursue a career in the medical device or prosthetics industry. I am inspired by combining biomedical and engineering to improve the quality of life, and I look forward to building a career that combines those two sectors. Beyond academics, I have been involved with the Michigan Running Club. Through this club, I have had the privilege of giving back to our local Special Olympics through fundraising and volunteering at various sporting practices. This club has allowed me to not only stay physically active, but has given me a community of amazing people whom I call my closest friends.

Paola Martinez



I am from Holland, Michigan which is known for its Dutch heritage and Tulip Time Festival in May. I was unsure what I wanted to study in college until I took an intro to engineering design course my senior year of high school. Taking that class allowed me to realize that engineering was the right path for me Once I came to college, I was unsure which type of engineering to pursue but realize mechanical engineering was the best fit for me since it was the collaboration, designing, and hands-on aspect of engineering that I was drawn to from my high school class. Another reason being that this major is such a broad discipline, I didn't feel like I was limiting myself to a certain industry too early in my undergraduate career. Currently I am a senior at the University of Michigan, graduating as

a mechanical engineer in May 2026. I was one of the students who participated in the GHDI program which solidified my interest in pursuing a career in the healthcare industry. I look forward to contributing to design solutions that improve the lives of others. Outside of the classroom I am involved in the Society of Hispanic Professional Engineers (SHPE) and the women in STEM sorority, Phi Sigma Rho. Both of these organizations have allowed me to grow my connections on campus and gain leadership experience.

Hendrik Nykamp



I grew up in Kentwood, Michigan, just south of Grand Rapids. I first became interested in engineering when my oldest brother went to college for mechanical engineering. We had always liked and been good at the same things, so as I got closer to graduating high school I began to look into engineering for college. Over the course of my freshman year of college I decided that I wanted to pursue mechanical engineering specifically, as I liked solving the problems that the courses provided and it seemed more suited to me than some of the other types of engineering. I have one more semester of school remaining, and will be graduating in May of 2026, and after graduation I plan to find a job in mechanical engineering. In my spare time in college, I enjoy staying active through biking and participating in the Michigan Running Club. The running club has been a large part of my college experience, as I have been involved in it my entire time at Michigan. It has enabled me to continue running competitively after high school, while also giving me great opportunities to volunteer and help the community around Ann Arbor.

Anya Wasilenski



I am from Byron, Michigan, a rural farming town with a population of around 500 people. I did not grow up in the town area, rather in a subdivision between corn/soybean fields and a cow farm. My interest in mechanical engineering started in high school when I joined my school's FIRST robotics team. My mom is a professional artist, so growing up I was surrounded by art opportunities which led to me becoming a crafty and creative person. My involvement in FIRST allowed this creativity to present itself in a mechanical context and I fell in love with it. Another reason for my interest in mechanical engineering is that I believe that engineering is the field where I can make the most positive impacts on humanity and the environment. I graduate this semester (December 2025) and I will be starting the manufacturing engineer masters SUGS program in January 2026. My focus during my masters will be on smart technologies and

sustainability within product designs and manufacturing processes. After graduation from the masters program, I plan to go into the manufacturing industry, ideally at a startup or smaller company that is focused on sustainability in their design and manufacturing processes. One interesting fact about me is that I have complete anosmia, which means I cannot smell, and have not been able to since I can remember. I still have a sense of taste, though we assume that it is different from what someone who could smell would experience. Additionally, I can sense, in my nostril and back of my throat, strong odors such as mint, ammonia, and eucalyptus. In high school, I was the drum major of our marching band for three years and will still conduct to the music I am listening to, especially if there are prominent down beats or tempo changes.