VISCOELASTIC SHALLOW SPHERICAL SHELLS UNDER TIME-DEPENDENT LOADS

by
William C. Orthwein

A dissertation submitted in partial fulfillment
of the requirements for the degree of
Doctor of Philosophy in the
University of Michigan
1958

Doctoral Committee:

Professor Paul M. Naghdi, Chairman
Assistant Professor Franklin Essenburg, Jr.
Professor George E. Hay
Associate Professor Gabriel Isakson
Professor Jesse Ormondroyd

ACKNOWLEDGEMENT

To his teacher, Professor P. M. Naghdi, who taught him many phases of mechanics and in particular visco-elasticity theory and shell theory, the author wishes to express his sincerest thanks for suggesting the topic of investigation, the encouragement received, and the many important comments offered during the course of this study.

TABLE OF CONTENTS

Page

LIST OF ILLUSTRATIONS. v

Chapter

I INTRODUCTION. 1

General Statement
Historical Background
Scope of the Dissertation

II THE LINEAR THEORY OF VISCOELASTICITY. 12

Introduction
Stress-Strain Relations for Linear Viscoelasticity
Comparison with Earlier Stress-Strain Relations
Principle of Correspondence

III BASIC EQUATIONS OF SHALLOW SHELLS 29

Introduction
Derivation of Basic Equations
Differential Equations of Equilibrium
Resultants
Equations of Equilibrium in Terms of Resultants
Further Assumptions
Stress-Strain Relations
Spherical Shells
Equations of Equilibrium
Stress-Strain and Moment-Curvature Relations
Strain and Curvature-Displacement Relations
Shallow Spherical Shells
Equilibrium Equations
Strain-Displacement Relations
Curvature-Displacement Relations
Moment-Curvature Relations
Basic Equations for Shallow Shells with Longitudinal Inertia Neglected
Basic Equations for Shallow Shells with Longitudinal Inertia Neglected, General Coordinates
Justification of Neglect of Longitudinal Inertia

TABLE OF CONTENTS

Chapter		Page
	Viscoelastic Shell Equations Some Results for Axisymmetric Static and Dynamic Elastic Shallow Spherical Shells Note on the Results of Section 19	
IV	SHALLOW SPHERICAL SHELL UNDER A TIME DEPENDENT LOAD.	82
	Introduction Properties of the Hankel Transform Viscoelastic Infinite Shallow Spherical Shell Under Arbitrary Axisymmetric Loading The Elastic Solution as a Special Case Comparison with Known Results Viscoelastic Solution, Maxwell Material The Viscoelastic Solution, Kelvin Material Presentation of Results Discussion of Results	
V	THE STEADY STATE VISCOELASTIC PROBLEM	121
	Introduction Solution of the Differential Equations in the Laplace Transform Plane Boundary and Initial Conditions Determination of the Coefficients $C_k(s)$ The Steady State Solution The Elastic Case as a By-Product Comparison with Existing Solutions for Elastic Spherical Shallow Shells The Viscoelastic Steady State--Maxwell Material The Viscoelastic Steady State--Kelvin Material Presentation of Results Discussion of Results for the Steady State	
BIBLIOGRAPHY		183

LIST OF ILLUSTRATIONS

Figure		Page
1.	Maxwell Model	16
2.	Kelvin Model.	17
3.	Moments and Resultants.	36
4.	Relation Between the Spherical Surface Coordinate System and the Rectangular Coordinate System	45
5.	Illustration of Shallow Shell Parameters. .	49
6.	Shallow Shell Under Concentrated Load . . .	74
7.	Transverse Displacement of a Maxwell Material and an Elastic Material.	114
8.	Transverse Displacement of a Kelvin Material.	115
9.	Transverse Displacement of an Elastic Plate	116
10.	Transverse Displacement of an Elastic Plate	117
11.	Steady State Displacement of Maxwell and Elastic Materials	172
12.	Steady State Displacement of a Kelvin Material.	173
13.	Membrane Stresses of a Maxwell Material . .	174
14.	Bending Stresses of a Maxwell Material. . .	175
15.	Membrane Stresses of a Kelvin Material. . .	176
16.	Bending Stresses of a Kelvin Material . . .	177
17.	Steady State Displacement and Stresses of an Elastic Material.	178

LIST OF ILLUSTRATIONS

Figure		Page
18.	Low Frequency Stresses in an Elastic Material.	179
19.	High Frequency Stresses in an Elastic Material.	180

CHAPTER I

INTRODUCTION

1. General Statement It will be assumed in the following discussion that the reader is familiar with the fundamentals of the theory of elasticity. The theory of viscoelasticity is analogous to the theory of elasticity in that it also is concerned with the analysis of the stresses and strains throughout a deformable material body when it is subjected to a prescribed set of initial and boundary conditions, which may vary with time. The distinguishing feature of viscoelasticity, however, is to be found in the stress-strain relations, in that the material is assumed to display viscous as well as elastic properties; thus for static loads, the state of stress, as well as the state of strain, changes with time for all finite time after the application of the load. The method of analysis is that common to the mechanics of continuous media subject to the assumption of infinitesimal deformation, except that the stress-strain (or constitutive) relations are modified to include viscous effects.

Viscous behavior is common to most, if not all, materials to a varying extent. This observation has motivated attempts to formulate a corresponding phenomenological theory since the time of Maxwell [1, 2], Boltzmann[3], Meyer [5] , Steintz [6] , and Kelvin [4] . Because of the combination of materials and temperature ranges employed in the investigations of that period, the non-elastic effects

observed represented a rather small correction to the classical theory of elasticity. Thus the study of these effects was largely of academic interest only, and remained so until recently.

With the advent of modern technology the situation has changed so that now in many practical problems the non-elastic effects are very important and may even dominate the classical elastic behavior. For example, the viscoelastic effects are of importance in problems of missiles and high speed aircraft where on the one hand aerodynamic heating subjects the forward structure to very high temperatures, and where on the other hand rocket and jet exhaust subject the nozzel and perhaps some control mechanisms to temperatures where the metals exhibit viscoelastic properties. A second example is found in the contemporary development of high polymeric and rubberlike materials whose rheology is predominantly viscoelastic. The increasingly widespread use of these materials has added further impetus to the study of the viscoelastic reaction of materials.

The studies related to these two examples represent two distinct paths of investigation of viscoelasticity at the present time. The first is often associated with the type of investigation as represented by the works of Lee, Brull, Sternberg, Radok, and others. In these studies it is assumed that the stress-strain relations can be specifically set down as a linear relation between the stress, the strain,

and their derivatives with respect to time. It is further assumed that the viscous properties of the material can be characterised by a single value for a certain parameter, called the viscous parameter, and referred to in the following chapter either as the relaxation time or the retardation time, according to the usage in equations (2.8) and (2.9). The problems solved to date in the case of linear, one-parameter, viscoelastic stress-strain relations are limited to the quasi-static[1] cases when more than one dimension is considered, and to cases involving only one dimension when the inertia effects are considered. The second line of investigation, as exemplified by the work of Gross (7), is based upon the assumption that the viscous properties are characterised by a continuous spectrum of relaxation times, or retardation times, rather than by a single value. Because of the complexity of the stress-strain relations when a relaxation, or retardation, spectrum is assumed, only the simplest problems have been considered [22] [23]. As a consequence much of the literature dealing with the viscoelasticity of polymers is concerned with experimental determination of this spectrum.

In this investigation it is assumed that the relaxation time, or retardation time, may be represented by a single

---

[1]We shall, in conformity with common usage in the literature, define a quasi-static problem as one in which the inertia effects are negligible (28).

value, and that the stress-strain relations are linear and may be expressed in the form given by Alfrey [11], Read [14] and Lee [26].

2. Historical Background The history of viscoelasticity begins with the papers of Maxwell [1, 2] in 1868, a paper by Boltzmann [3] in 1876, Meyer [4] in 1874, Steintz [5] in 1874 and a much reproduced paper by Kelvin [6] in 1890 in which a slightly different stress-strain relation from that earlier suggested by Maxwell is proposed. The proposal is couched in descriptive terms only, and it remained for Voigt to express it with mathematical precision [7, 8]. The publications immediately following the above papers are largely concerned with representing phenomenological observations by assuming the material to be composed of one or more of the elementary types of material proposed in the above papers. Eventually Wiechert [9] suggested that instead of imagining the subject material to be made up of a finite, but perhaps large, collection of elements as described by Kelvin or Maxwell, one should consider a continuous distribution of values for the parameters. The Wiechert suggestion acquired a multitude of adherents, and the predominant part of the literature is concerned with the measurement and nature of this distribution, which is described by a distribution function. The theoretical aspects of this work and a fairly complete list of references dealing with this spectrum, or distribution function, may be found in Gross's work [10].

In 1944 Alfrey [11] initiated a different line of investigation of the subject of viscoelasticity. Whereas his predecessors, with the exception of Maxwell, Boltzmann, Kelvin, and other early investigators, were concerned primarily with the distribution function, and did not consider further the nature of the stress-strain relations, Alfrey set for himself the task of generalizing the relations themselves. In his paper he gave more general stress-strain relations in terms of two time derivative operators, one operating upon the stress deviator and the other upon the strain deviator, subject to the restriction that the material be incompressible. Simha [12] had earlier attempted the same generalization, but substituted the stress tensor for the deviatoric stress tensor in the Alfrey type relation. The difference in the reasoning of Alfrey from that of Simha can be well described by a footnote in Alfrey's paper [11], relative to Simha's work. The footnote reads "Such stress-strain relations imply that, at constant strain, the stress decays exponentially with a relaxation time τ which is independent of the geometrical nature of the stress. This treatment ignores the fact that viscous flow, which is the cause of relaxation, is a response to shearing stresses only. In an incompressible material a uniform hydrostatic pressure does not produce viscous flow, and, hence, does not tend to relax." In 1950 H. S. Tsien [13] further generalized the relations introduced by Alfrey to isotropic compressible media. While Alfrey had stated that the coefficients in the

operator functions of the time derivative were to be constant, dependent only upon the material, Tsien relaxed these conditions. He stipulated that the coefficients could be functions of time as well as functions of the material. In this way materials not at thermodynamic or chemical equilibrium may be treated; it is tacitly assumed that the stress-strain relations were affected by small departures from thermodynamic and chemical equilibrium.

In 1950 W. T. Read [14] introduced the assumption, with a dearth of physical argument, that the differential operators applied to the deviatoric stress and deviatoric strain need not, and in general are not, the same as the differential operators applied to the first stress invariant and to the first strain invariant. This last generalization produces the form of the stress-strain relations that will be used in this investigation.

A different line of investigation was instituted between 1950 and 1954 by Staverman [15, 16], Schwarzl [15], Meixner [17, 18] and Biot [19, 20, 21] who founded their theory on thermodynamic considerations. Taking Biot's system as typical (Biot [21] believes it to be more general in several respects), we find that, according to Biot, it introduces a generalized form of the free energy which applies to systems with non-uniform temperatures, and thereby we may include thermo-elastic effects in granular, porous, or multiphase systems, as well as couplings of chermochemical nature and others. The general irreversible thermodynamic problem is also formu-

lated for the case of arbitrary time-dependent perturbations applied to any system defined by its generalized free energy and a dissipation function. It may be noted that the Onsager reciprocity relations play a central role in the derivation of Biot's stress-strain relations, which may be specialized to yield a Maxwell or Kelvin material.

Only the simplest problems have been solved under the assumption that the relaxation time, or retardation time, covers a continuous spectrum. For such conditions E. Volterra [22] has solved problems of free radial vibrations of an isotropic sphere (the originally concentric spherical surfaces remain concentric spherical surfaces throughout the deformation), the vibrations of a flexible string, lateral vibration of bars, and the vibration of membranes; all under the assumption that the time and space variables are separable, and that the hereditary characteristics affect the time dependence only.

In 1947, three years before Volterra's work, Rosovsky [23] under similar assumptions solved the problems of the transverse vibrations of a rod, both free and forced oscillations, and the radial oscillations of a solid sphere, and the vibrations of an elastic plate with after-effect.

On the other hand, the simplification obtained by assuming a single value for the retardation time, or the relaxation time, coupled with the Laplace transformation, allows us to treat a somewhat wider range of problems. Alfrey, in 1944 [11], and Brull, in 1952 [24], observed that the

viscoelastic problem in the transformed plane can be associated with a similar elastic boundary value problem in the real plane if the elastic constants are replaced by time differential operators in the real plane, or equivalently by polynomial expressions in the transform variable in the transformed plane. While evidently not explicitly stated, a similar observation was made by Gubanov [25] in 1947 in connection with what he chose to call a "structured liquid". Lee [26] apparently observed this in 1953, although the paper was not published until 1955, and it was fornally stated as the correspondence principle of viscoelasticity by Sternberg [27] shortly thereafter. In effect this means that the entire store of solutions to problems involving elastic materials can be drawn upon to supply solutions to viscoelastic problems, limited only by the difficulty of performing the inverse transformation. This latter task can indeed be formidable.

The situation at the present time is that described by Lee [28] who stated: "Problems with inertia forces neglected are called quasi-static, and can be treated much more completely than the full equations. The corresponding general theory for small strains has been discussed by Lee and is described below. The introduction of inertia forces leads to wave propagation problems, and the development of the theory has been effectively confined to one-dimensional problems other than for steady oscillatory motion, as for example, discussed by Adler, Sawyer, and Ferry [29] and

Oestreicher [30] ." In other words, in more than one dimension only quasi-static or steady oscillatory problems have been treated, while problems with inertia forces included have been limited to one dimension.

A search of the literature indicates that the subject of viscoelastic shells has received no attention up to the present time, for either steady oscillatory motion or for wave propagation. In the present investigation the class of problems with inertia forces included is extended to include the case of viscoelastic shell vibration. In Chapter IV the propagation of a wave due to on instantaneous pulse load is considered, and in Chapter V the steady state oscillation of the shell is treated, both for axially symmetric loading.

3. Scope of the Dissertation The dissertation is concerned with the response of shallow viscoelastic spherical shells to arbitrary time-dependent axisymmetric loads.

Chapter II contains an exposition of the linear theory of viscoelasticity together with a discussion of special idealized viscoelastic media, or models, and the correspondence principle betwwen the field equations and the associated boundary and initial conditions of the linear homogeneous isotropic theories of elasticity and viscoelasticity.

In Chapter III first a brief account of the linear theory of thin elastic shells is given and then the differential equations of motion of shallow elastic shells are derived. Next, following Reissner [38], we show that this latter system of differential equations may be reduced to the deter-

mination of the axial displacement w and an Airy stress function F ; this reduction is carried out in a systematic fashion and results in a precise statement regarding the range of validity of the transverse vibration of shallow elastic shells where the longitudinal inertia terms - with negligible error - are neglected.

Chapter IV contains the general solution for an unlimited viscoelastic spherical shell subjected to arbitrary time-dependent axisymmetric loads. The solution, which is valid for homogeneous and isotropic media, is obtained with the use of differential equations characterising the transverse motion of shallow shells and the joined use of the Laplace and Hankel transforms - the use of the latter transforms in viscoelasticity seems to be novel and is evidently responsible for the avoidance of an otherwise difficult task of contour integration in the Laplace transform plane. Among the special cases studied are the solution to the elastic shell and flat plate under instantaneous pulse loading (both deduced as by-products), as well as the solution for incompressible viscoelastic Maxwell and Kelvin bodies, both under instantaneous pulse loading. These solutions presented in integral form unfortunately do not admit of a closed representation even when the time variation of the load is harmonic.

Chapter V is devoted to a study of shallow viscoelastic spherical shells subjected to axisymmetric loads which vary harmonically in time. The method of solution employed is

direct in that it involves the Laplace transformation and the correspondence principle and is valid for finite shell segments as well as for unlimited shells. While for unlimited shells (subject to loads which vary harmonically in time) the solution may be obtained directly from the general results given in Chapter IV, unfortunately, as noted earlier, the solution does not admit of a closed representation and may, from the practical point of view, be handicapped. On the other hand, the method employed in this chapter for such problems leads to closed representation in terms of Kelvin functions. By way of illustration numerical results are obtained for unlimited shallow spherical shells of (a) elastic, (b) viscoelastic, Maxwell type, (c) viscoelastic, Kelvin type, all subject to uniform pressure distributions (which vary harmonically in time) over small regions about the apex. These results given for two frequency ranges clearly demonstrate the features of the various media.

Chapter II

THE LINEAR THEORY OF VISCOELASTICITY

1. Introduction The linear theory of viscoelasticity differs from the linear theory of elasticity only in that the stress-strain relations involve the stress, the strain, and the derivative of stress and the derivative of strain with respect to time. Both theories are restricted to infinitesimal deformations, and therefore have the same stress equations of motion and the same strain-displacement relations. In tensor notation these are, in curvilinear coordinates,

$$\sigma^{i}_{\cdot j}|^{j} + X^{i} = \rho \dot{v}^{i}, \tag{2.1}$$

$$\epsilon^{i}_{\cdot j} = \frac{1}{2}\left(u^{i}|_{j} + u_{j}|^{i}\right), \tag{2.2}$$

in which ρ is the mass per unit volume, X^{i} is the body force per unit volume, $\sigma^{i}_{\cdot j}$ is the stress, v^{i} is the velocity, $\epsilon^{i}_{\cdot j}$ is the strain, u^{i} is the displacement, in which the following notation has been used

$$\sigma^{i}_{\cdot j} = \sigma^{i}_{\cdot j}(x^{k}, t), \qquad u^{i} = u^{i}(x^{k}, t); \tag{2.1}$$

$$(\dot{}) \equiv \frac{\partial (\,)}{\partial t}, \qquad i, j, k = 1, 2, 3. \tag{2.2}$$

and where the suffix following a line represents covariant or contravariant differentiation. In rectangular Cartesian coordinates equations (2.1) and (2.2) become respectively

$$\sigma_{ij,j} + X_i = \rho \ddot{v}_i , \tag{2.3}$$

$$\epsilon_{ij} = \frac{1}{2} (u_{i,j} + u_{j,i}) , \tag{2.4}$$

in which a suffix following a comma denotes partial differention as $( )_{i,j} \equiv \frac{\partial ( )_i}{\partial x_j}$.

2. Stress-Strain Relations for Linear Viscoelasticity

The form of the stress-strain relations which will be used in this analysis were introduced by W. T. Read [14] who assumed different operator expressions for the deviatoric stress-strain relations than for the relations between the first invariants of stress and strain. These stress-strain relations have been used by E. H. Lee [28] and were specifically set down by Sternberg [27] for Kelvin (or Voigt) and Maxwell materials, which we shall discuss presently.

For a linear viscoelastic material the form of the stress-strain relations is

$$P_1(\theta)\, s_{ij} = P_2(\theta)\, e_{ij} , \tag{2.5}$$

$$P_3(\theta)\, \sigma = P_4(\theta)\, e , \tag{2.6}$$

where the operator functions $P_k(\theta)$ are defined by

$$P_k(\theta) = \sum_{\kappa=0}^{m_k} a_\kappa \theta^\kappa \tag{2.7}$$

in which m_k determines the highest derivative in (2.7) and in which

$$\theta^k \equiv \frac{\partial^k}{\partial t^k},$$

and

$$a_{m_k} \neq 0.$$

Furthermore the a_k are assumed to be constants, which is to imply that relations (2.1) and (2.2) are valid for isotropic, homogeneous, linear viscoelastic media whose elastic properties are temperature independent. In equations (2.1) and (2.2) we have used the notation that

$$s_{ij} = \sigma_{ij} - \sigma \delta_{ij}, \tag{2.8}$$

where

$$\sigma = \frac{1}{3} \sigma_{ii} = \frac{1}{3} \Theta, \tag{2.9}$$

and that

$$e_{ij} = \epsilon_{ij} - e \delta_{ij}, \tag{2.10}$$

where

$$e = \frac{1}{3} \epsilon_{ii} = \frac{1}{3} \Delta, \tag{2.11}$$

δ_{ij} being the Kroneker delta. In the literature the quantity s_{ij} is often referred to as the deviatoric stress, while e_{ij} is known as the deviatoric strain. The quantities σ and e are known as the hydrostatic stress and hydrostatic

strain respectively, and are related to the first stress invariant and first strain invariant respectively, as shown in (2.9) and (2.11).

The Maxwell and Kelvin materials mentioned earlier in the presentation are special cases of the forms (2.5) and (2.6) and are of special importance in that the more complicated models may be considered as composites of the Maxwell and Kelvin prototypes. The defining equations for a Maxwell material are

$$P_1(\theta) = \theta + \frac{1}{\tau}, \qquad P_3(\theta) = \theta,$$
$$P_2(\theta) = 2\mu\theta, \quad \text{and} \quad P_4(\theta) = 3K\theta, \tag{2.12}$$

in which $\tau = \frac{\eta}{\mu}$ is the relaxation time, and in which η is the viscosity, μ is the shear modulus, and K is the bulk modulus. The Kelvin material is defined by the relations

$$P_1(\theta) = 1, \qquad P_3(\theta) = \tau\theta, \tag{2.13}$$
$$P_2(\theta) = 2\mu(\tau\theta + 1) \quad \text{and} \quad P_4(\theta) = 3K\tau\theta,$$

in which $\tau = \frac{\eta}{\mu}$ is the retardation time, and η, μ and K are defined as above. Note that τ has the same definition in both materials, and the same dimensions, but that is plays a different role in the two materials. For this reason it is referred to as the relaxation time in the former case, and as the retardation time in the latter case.

From this purely mathematical representation of the two viscoelastic media, Alfrey [31] has presented a method of constructing one dimensional mechanical analogues for the different materials in terms of springs and dashpots. According to this method the Maxwell material may be represented by a model consisting of a spring and a dashpot in series as shown in figure 1. The precise formula relating

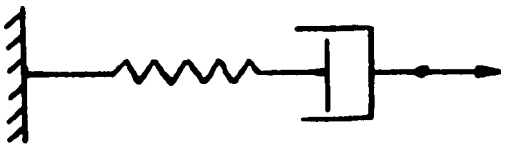

figure 1

the constants of the model and the constants in (2.8) will not be considered here, since this is not the purpose of this discussion; rather the value of the models in this discussion is to give a physical picture of the relation between the parameters and the qualitative behavior of the material. From figure 1 we see, for example, that as the viscosity of the dashpot goes to infinity the model approaches that of an elastic material; that is, the Maxwell material approaches an elastic material as the relaxation time goes to infinity. On the other hand, we see that a sustained constant force on the Maxwell material results in a constantly growing displacement. This observation will be of importance later, since it indicates that to obtain an elastic solution from a viscoelastic total solution (transient plus

steady state) employing a Maxwell material it is necessary to first let the relaxation time go to infinity and then let the time go to infinity. The order of taking the limits cannot be interchanged.

The Kelvin model may be represented by a spring and dashpot in parallel, as illustrated in figure 2. Again the particular relation relating the constants of the model and

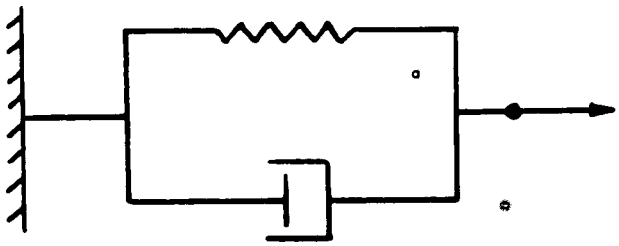

figure 2

those of the material is of no great importance here, but can be obtained from [31]. From figure 2 it is evident, however, that as the viscosity of the dashpot goes to zero the model approaches that of an elastic material; so that as the viscosity of the material goes to zero the Kelvin material approaches an elastic material. When the viscosity of the Kelvin material becomes infinite, the model immediately shows that the displacement goes to zero. Consequently the non-interchangeability of the limiting processes involved in obtaining an elastic solution from a viscoelastic one which occurred in the Maxwell material does not occur in the case of a Kelvin material. The same result is found regardless of whether the retardation time is first allowed to go to zero and then the time allowed to go to

zero, or whether the real time if first allowed to go to zero and then the retardation time allowed to go to zero.

For the purposes of the present investigation it is more convenient to use the stress-strain relations in terms of the stress tensors and the strain tensors and their first invariants, rather than the deviatoric form given in (2.5) and (2.6). Rather than obtain the non-deviatoric form from (2.12) and (2.13), one may obtain it from (2.5) and (2.6) for a general material and then specialize to either a Kelvin material or to a Maxwell material. This is the procedure that will be followed here.

If we multiply (2.6) by $P_1 P_3^{-1}$ and add the result to (2.5), we find that in rectangular Cartesian coordinates

$$P_1(\theta)\, s_{ij} + P_1(\theta)\, \sigma\, \delta_{ij} = P_2(\theta)\, e_{ij} + P_1(\theta)\, P_3^{-1}(\theta)\, P_4(\theta)\, e\, \delta_{ij}, \tag{2.14}$$

in which as before,

$$e_{ij} = \epsilon_{ij} - e\, \delta_{ij}, \tag{2.15}$$

and

$$e = \frac{1}{3}\Delta = \frac{1}{3}\epsilon_{ii}, \tag{2.16}$$

and the remaining quantities have been defined previously. The symbol $P_\kappa^{-1}(\theta)$ may be associated with an integration, as discussed in [32] and in [33]. Because the problem in

the present investigation will be solved by means of the Laplace transformation, the algebra, or calculus, of the $P_k(\theta)$ is of little importance since it will be replaced by the calculus of the operators $P_k(s)$, which in turn is expressible in terms of the calculus of the transform variable S . Proceeding formally then, we find the use of (2.14), (2.15) and (2.16) enables us to write

$$P_1(\theta)\,\sigma_{ij} = P_2(\theta)\,\epsilon_{ij} + \left[\frac{P_1(\theta)\,P_4(\theta)}{P_3(\theta)} - P_2(\theta)\right] e\,\delta_{ij}, \tag{2.17}$$

or that

$$P_1(\theta)\,\sigma_{ij} = P_2(\theta)\,\epsilon_{ij} + \frac{1}{3}\,P_1(\theta)\left[\frac{P_4(\theta)}{P_3(\theta)} - \frac{P_2(\theta)}{P_1(\theta)}\right]\Delta\,\delta_{ij}. \tag{2.18}$$

If we multiply both sides of (2.18) by $P_1^{-1}(\theta)$, we obtain the form given in equation (2.19),

$$\sigma_{ij} = \frac{P_2(\theta)}{P_1(\theta)}\,\epsilon_{ij} + \frac{1}{3}\left[\frac{P_4(\theta)}{P_3(\theta)} - \frac{P_2(\theta)}{P_1(\theta)}\right]\Delta\,\delta_{ij}. \tag{2.19}$$

Equations (2.19) may be inverted to give expressions for ϵ_{ij} . To this end, set $i=j$ in (2.14) to get

$$P_1(\theta)\,\textcircled{w} = \left[\frac{P_1(\theta)\,P_4(\theta)}{P_3(\theta)} - P_2(\theta)\right]\Delta + P_2(\theta)\,\Delta$$

$$= \frac{P_1(\theta)\,P_4(\theta)}{P_3(\theta)}\,\Delta. \tag{2.20}$$

When we multiply both sides of (2.20) by $\frac{P_2(\theta)\, P_3(\theta)}{P_1(\theta)\, P_4(\theta)}$ we find

$$P_2(\theta)\Delta = \frac{P_2(\theta)\, P_3(\theta)}{P_4(\theta)} \Theta. \tag{2.21}$$

in which Θ is the first stress invariant, and is given by the formula $\Theta = 3\sigma = \sigma_{ii}$.

The addition of equations (2.20) and (2.21) shows that

$$\left[\frac{P_1(\theta)\, P_4(\theta)}{P_3(\theta)} - P_2(\theta)\right]\Delta = \left[P_1(\theta) - \frac{P_2(\theta)\, P_3(\theta)}{P_4(\theta)}\right]\Theta. \tag{2.22}$$

Upon substituting (2.22) on the right hand side of (2.16), or (2.20) and rearranging the terms, we have the expression

$$P_2(\theta)\epsilon_{ij} = P_1(\theta)\sigma_{ij} - \frac{1}{3} P_2(\theta)\left[\frac{P_1(\theta)}{P_2(\theta)} - \frac{P_3(\theta)}{P_4(\theta)}\right]\Theta\,\delta_{ij}. \tag{2.23}$$

By multiplying both sides of (2.23) by $P_2^{-1}(\theta)$, we may obtain the formula for strain in terms of the viscoelastic operators, the elastic constants, and the stress and first stress invariant. This expression is

$$\epsilon_{ij} = \frac{P_1(\theta)}{P_2(\theta)}\,\sigma_{ij} - \frac{1}{3}\left[\frac{P_1(\theta)}{P_2(\theta)} - \frac{P_3(\theta)}{P_4(\theta)}\right] \circledcirc \delta_{ij}. \qquad (2.24)$$

In the following pages the stress-strain relations for the linear viscoelastic theory will be taken to be of the form given in (2.19) and (2.24) for the stress tensor and strain tensor respectivly. The substitution from (2.12) and (2.13) for the $P_k(\theta)$ in (2.19) and (2.24) will give the relations peculiar to the Maxwell and Kelvin-Voigt materials respectively. For a Maxwell material the relations are

$$\sigma_{ij} = \frac{2\mu\theta}{\theta + \frac{1}{\tau}}\,\epsilon_{ij} + \frac{1}{3}\left[\frac{3K\theta}{\theta} - \frac{2\mu\theta}{\theta + \frac{1}{\tau}}\right]\Delta\,\delta_{ij}, \qquad (2.21)$$

$$\epsilon_{ij} = \frac{\theta + \frac{1}{\tau}}{2\mu\theta}\,\sigma_{ij} - \frac{1}{3}\left[\frac{\theta + \frac{1}{\tau}}{2\mu\theta} - \frac{\theta}{3K\theta}\right] \circledcirc \delta_{ij}, \qquad (2.22)$$

and for the Kelvin-Voigt material the relations are

$$\sigma_{ij} = 2\mu(\tau\Theta + 1)\epsilon_{ij} + \frac{1}{3}\left[\frac{3K\tau\Theta}{\tau\Theta} - 2\mu(\tau\Theta+1)\right]\Delta\delta_{ij}, \tag{2.23}$$

$$\epsilon_{ij} = \frac{1}{2\mu(\tau\Theta+1)} - \frac{1}{3}\left[\frac{1}{2\mu(\tau\Theta+1)} - \frac{\tau\Theta}{3K\tau\Theta}\right]\Theta\delta_{ij}. \tag{2.24}$$

3. Comparison with Earlier Stress-Strain Relations

Chronologically Kelvin is credited with having first suggested a modification of the elasticity theory of his time to include time dependent phenomena. As mentioned in the Historical Introduction, it was Voigt, however, who first formulated the idea mathematically. This formulation remained largely unchanged until 1944 when Alfrey suggested that a Kelvin material could be characterised by the constitutive equations

$$s_{ij} = 2\mu\epsilon_{ij} + 2\eta\dot{\epsilon}_{ij} \tag{2.25}$$

in which η is the coefficient of viscosity; and that the Maxwell constitutive equations were

$$\dot{\epsilon}_{ij} = \frac{1}{2\mu}\dot{s}_{ij} + \frac{1}{2\mu\tau}s_{ij} \tag{2.26}$$

in which τ was called the relaxation time and μ the elastic modulus of rigidity; and that the notion of a linear viscoelastic material could be generalized to include stress-strain relations for the form

$$\left(\sum_{k=0}^{m} a_k \theta^k \right) s_{ij} = \left(\sum_{k=0}^{n} b_k \theta^k \right) \epsilon_{ij}, \qquad (2.27)$$

$$a_m = 1, \qquad b_n \neq 0.$$

The a_k and b_k were defined as constants characteristic of the material at hand, assumed incompressible.

Equations (2.27) were generalized by H. S. Tsien [10] who gave the stress-strain relations for a compressible material as

$$P\sigma_{ij} = Q\left(\lambda \Delta \delta_{ij} + 2\mu \epsilon_{ij}\right) \qquad (2.28)$$

in which λ and μ were specified merely as constants. The operators P and Q were defined by

$$P = \sum_{k=0}^{m} a_k \theta^k, \qquad (2.29)$$

$$Q = \sum_{k=0}^{n} b_k \theta^k, \qquad (2.30)$$

with the stipulation that

$$a_m = 1, \qquad b_m = 1,$$

and that a_k and b_k may be functions of time. With these relaxed conditions on the coefficients Tsien introduced the possibility of considering a material with changing properties, caused by the drift of the material towards thermodynamic and chemical equilibrium.

That these are all obtainable from equations (2.1) and (2.2) is evident, with the possible extension of (2.1) and (2.2) to include the cases of time dependent coefficients in the expressions for the $P_k(\theta)$. To include inhomogeneous and anisotropic materials one must allow the coefficients to be space dependent and non-invarient to rotations.

4. The Principle of Correspondence Guided by the work of Lee [23] in establishing the correspondence principle for the deviatoric and first invariant stress-strain relations, let us consider a body subjected to prescribed body forces $X_i(x^k, t)$ per unit volume, tractions $T_i(x^k, t)$ on the surface S or surface displacements $u_i(x^k, t)$, as well as combinations of these in the arrangements in which they occur also in elasticity theory. To obtain a complete solution, wherein the stresses and strains are obtained throughout the body, one must satisfy the following set of equations:

$$\epsilon_{ij} = \frac{1+\nu}{E}\sigma_{ij} - \frac{\nu}{E}\Theta\,\delta_{ij},$$

$$\sigma_{ij} = \lambda\Delta\,\delta_{ij} + 2\mu\,\epsilon_{ij},$$

$$\sigma_{ij} = -X_i + \rho\,\Theta^2 u_i, \qquad (2.31)$$

$$T_i = \sigma_{ij}\,n_j,$$

$$\epsilon_{ij} = \epsilon_{ij}(x^k, t), \quad \sigma_{ij} = \sigma_{ij}(x^k, t),$$

$$u_i = u_i(x^k, t), \quad X_i = X_i(x^k, t), \quad T_i = T_i(x^k, t),$$

in which n_j is the surface normal in the outward direction. These equations may be transformed from a two dimensional differential system to a one dimensional differential system by operating upon them with the Laplace transform with respect to time. The transformed set will be denoted by a bar over the corresponding function. Only bodies which are initially undisturbed will be considered in this analysis; therefore the operator Θ transforms into the Laplace varaible s. Thus the Laplace transformation operating upon the set (3.31) yields the set

$$\bar{\epsilon}_{ij} = \frac{1+\nu}{E}\bar{\sigma}_{ij} - \frac{\nu}{E}\bar{\Theta}\,\delta_{ij},$$

$$\bar{\sigma}_{ij} = \lambda\bar{\Delta}\,\delta_{ij} + 2\mu\,\bar{\epsilon}_{ij},$$

$$\bar{\sigma}_{ij} + \bar{X}_i = s^2\rho\,\bar{u}_i,$$

$$\bar{T}_i = \bar{\sigma}_{ij}\,n_j, \qquad (2.32)$$

in which

$$\bar{\epsilon}_{ij} = \bar{\epsilon}_{ij}(x^k, s), \qquad \bar{\sigma}_{ij} = \bar{\sigma}_{ij}(x^k, s),$$

$$\bar{u}_i = \bar{u}_i(x^k, s), \qquad \bar{X}_i = \bar{X}_i(x^k, s),$$

$$\bar{T}_i = \bar{T}_i(x^k, s).$$

If the problem had been originally stated for a viscoelastic body the first two equations of (2.31) would have been replaced by equations (2.24) and (2.19) respectively, and the first two equations of (2.32) would have been replaced by the following two equations:

$$\bar{\epsilon}_{ij} = \frac{1+\nu(s)}{E(s)}\bar{\sigma}_{ij} - \frac{\nu(s)}{E(s)}\bar{\Theta}\delta_{ij},$$

$$\bar{\sigma}_{ij} = \lambda(s)\bar{\Delta}\delta_{ij} + 2\mu(s)\bar{\epsilon}_{ij}.$$

Thus (2.32) represents a stress analysis problem for an elastic body of the same shape as the viscoelastic body, but with the elastic constants replaced by functions of s in the case of the viscoelastic body. This observation is at the root of the correspondence principle, which may be stated as follows:

The viscoelastic boundary value problem in the transform plane may be obtained from the corresponding elastic problem in the real plane by replacing the elastic constants by their corresponding operator functions, and replacing t by s in the functional symbols $\sigma_{ij}(x^k, t)$, $\epsilon_{ij}(x^k, t)$, and so on. In the equations of equilibrium $\theta^2 \rho u_i$ is replaced by $s^2 \rho \bar{u}_i$ in accord with the Laplace transformation.

The operator functions corresponding to the elastic moduli may be determined by comparing the stress-strain relations in (2.31) with the stress-strain relations (2.19) and (2.24) after they have been operated upon with the Laplace transformation with respect to time. If we require that the stresses, strains, displacements, and velocities be zero initially, then the comparison enables us to define the quantities

$$E(s), \quad \lambda(s), \quad \nu(s), \quad \mu(s)$$

used above. The remainder of this section will be devoted to the details of this comparison and the determination of the explicit expressions for E(s) and $\nu(s)$.

From (2.19), (2.24) and (2.31) we may immediately write that[2]

$$\frac{P_1(s)}{P_2(s)} \sim \frac{1+\nu}{E} \tag{2.33}$$

---

[2]The symbol $\sim$ means "corresponds to"

and

$$\frac{1}{3}\left[\frac{P_1(s)}{P_2(s)} - \frac{P_3(s)}{P_4(s)}\right] \sim \frac{\nu}{E} \qquad (2.34)$$

by direct comparison. The correspondence indicated in the above equations becomes equality when the retardation time goes to infinity, or when the relaxation time goes to zero. From (2.33) we have that

$$E \sim E(s) = [1 + \nu(s)]\frac{P_2(s)}{P_1(s)} \qquad (2.35)$$

and from (2.34) we have that

$$E \sim E(s) = 3\nu(s)\frac{P_2(s)\,P_4(s)}{P_1(s)\,P_4(s) - P_2(s)\,P_3(s)} \qquad (2.36)$$

Using these two independent equations we may determine E(s) and $\nu(s)$. Upon doing so we have that

$$\nu(s) = \frac{P_1(s)\,P_4(s) - P_2(s)\,P_3(s)}{P_2(s)\,P_3(s) + 2P_1(s)\,P_4(s)} \qquad (2.37)$$

and that

$$E(s) = \frac{3P_2(s)\,P_4(s)}{P_2(s)\,P_3(s) + 2P_1(s)\,P_4(s)} \qquad (2.38)$$

The remaining operator moduli may be obtained from the two operator moduli (2.37) and (2.38) by paralleling the usual methods of elasticity. Thus the stress-strain relations are completely specified for the general linear viscoelastic material in the Laplace transform plane.

Chapter III

BASIC EQUATIONS OF SHALLOW SHELLS

1. Introduction In this chapter the basic equations of shell theory will be developed and then reduced to the case of shallow shells, with inertia forces included. The general equations of elasticity may be specifically written for a particular coordinate system in the three-dimensional Euclidian space if the formula for the line element in the space is known; that is if the g_{ij} are specified in

$$(ds)^2 = g_{ij}\, dx^i\, dx^j .$$

In the succeeding discussion we shall consider an orthogonal coordinate system in which the metric tensor is given by

$$(g_{ij}) = \begin{pmatrix} g_{11} & 0 & 0 \\ 0 & g_{22} & 0 \\ 0 & 0 & g_{33} \end{pmatrix} \tag{3.1}$$

The physical components in this space are given by the following expressions involving the components of the metric tensor g_{ij}:

$$[\sigma_{ij}] = \frac{1}{\sqrt{g_{(ii)}\, g_{(jj)}}}\, \sigma^{ij} , \tag{3.2}$$

$$[\sigma_{ij}] = \frac{g^{ik}\, g^{jl}}{\sqrt{g_{(ii)}\, g_{(jj)}}}\, \sigma_{kl}$$

where i and j run through the value 1, 2, 3 and where the parentheses around subscripts or superscripts indicate that the summation convention is suspended.

In particular we shall consider a coordinate system composed of the principle directions, or lines of curvature, on the middle surface of the shell and the normal to this surface. The middle surface is here taken to be a surface which lies midway between the upper and lower bounding surfaces of the shell in the undeformed state as illustrated below.

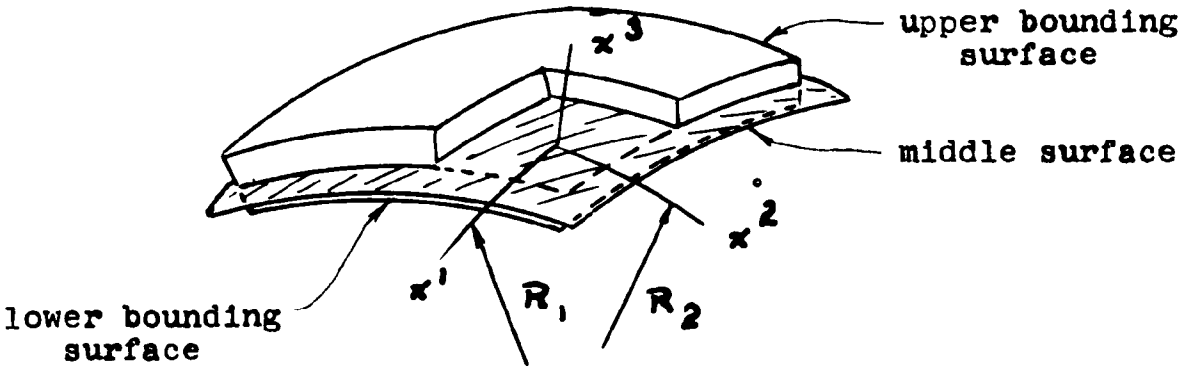

If we further denote the principle radii of curvature by R_1 and R_2, the coordinates along the principle directions by x^1 and x^2, and the coordinate in the direction of the normal by x^3, we then may write

$$\frac{1}{\sqrt{g_{11}}} = h_1 = \alpha_1^{-1}\left(1 + \frac{x^3}{R_1}\right)^{-1},$$

$$\frac{1}{\sqrt{g_{22}}} = h_2 = \alpha_2^{-1}\left(1 + \frac{x^3}{R_2}\right)^{-1}, \quad \frac{1}{\sqrt{g_{33}}} = 1, \tag{3.3}$$

in which $\alpha_1 = \frac{ds_1}{dx_1}$ and $\alpha_2 = \frac{ds_2}{dx_2}$

where s_1 and s_2 are the arc lengths in the x_1 and x_2 directions respectively.

2. Derivation of Basic Equations In terms of physical components then

$$\epsilon_{11} = \frac{1}{E}[\sigma_{11} - \nu(\sigma_{22} + \sigma_{33})],$$

$$\epsilon_{22} = \frac{1}{E}[\sigma_{22} - \nu(\sigma_{11} + \sigma_{33})], \qquad (3.4)$$

$$\epsilon_{33} = \frac{1}{E}[\sigma_{33} - \nu(\sigma_{11} + \sigma_{22})],$$

$$\epsilon_{12} = \frac{1}{2\mu}\sigma_{12}, \quad \epsilon_{13} = \frac{1}{2\mu}, \quad \epsilon_{23} = \frac{1}{2\mu}\sigma_{23},$$

in which

E is Young's modulus of elasticity

ν is Poisson' ratio

$$\mu = \frac{E}{2(1+\nu)}$$

If the squares, products and squares and products of the derivatives of the vector $\bar{u}_i$ with respect to the coordinates are neglected, then with $h_1 = \frac{1}{\sqrt{g_{11}}}$ and so on, the strains are given by

$$\epsilon_{11} = \frac{1}{h_1}\frac{\partial \hat{u}_1}{\partial x_1} + \frac{\hat{u}_2}{h_1 h_2}\frac{\partial h_1}{\partial x^2} + \frac{\hat{u}_3}{h_1 h_2}\frac{\partial h_1}{\partial x^3},$$

$$\epsilon_{22} = \frac{\hat{u}_1}{h_1 h_2}\frac{\partial h_2}{\partial x_1} + \frac{1}{h_2}\frac{\partial \hat{u}_2}{\partial x_2} + \frac{\hat{u}_3}{h_2 h_3}\frac{\partial h_2}{\partial x^3},$$

$$\epsilon_{33} = \frac{\hat{u}_1}{h_1 h_3}\frac{\partial h_3}{\partial x^1} + \frac{\hat{u}_2}{h_2 h_3}\frac{\partial h_3}{\partial x^2} + \frac{1}{h_3}\frac{\partial \hat{u}_3}{\partial x^3},$$

(3.5)

$$\epsilon_{12} = \frac{1}{2}\left[\frac{h_1}{h_2}\frac{\partial}{\partial x^2}\left(\frac{\hat{u}_1}{h_1}\right) + \frac{h_2}{h_1}\frac{\partial}{\partial x^1}\left(\frac{\hat{u}_2}{h_2}\right)\right],$$

$$\epsilon_{23} = \frac{1}{2}\left[\frac{h_1}{h_3}\frac{\partial}{\partial x^3}\left(\frac{\hat{u}_1}{h_1}\right) + \frac{h_3}{h_1}\frac{\partial}{\partial x^1}\left(\frac{\hat{u}_3}{h_3}\right)\right],$$

$$\epsilon_{13} = \frac{1}{2}\left[\frac{h_2}{h_3}\frac{\partial}{\partial x^3}\left(\frac{\hat{u}_2}{h_2}\right) + \frac{h_3}{h_2}\frac{\partial}{\partial x^2}\left(\frac{\hat{u}_3}{h_3}\right)\right],$$

3. Differential Equations of Equilibrium The differential equation of equilibrium are, in terms of the physical components, and referred to the x^i system,

$$\frac{\partial}{\partial x^1}(h_1 h_3 \sigma_{11}) + \frac{1}{h_1}\frac{\partial}{\partial x^2}(h_1^2 h_3 \sigma_{12}) + \frac{1}{h_1}\frac{\partial}{\partial x^3}(h_1^2 h_2 \sigma_{13})$$

$$-h_3\frac{\partial h_2}{\partial x^1}\sigma_{22}-h_2\frac{\partial h_3}{\partial x^1}\sigma_{33}+h_1h_2h_3X_1=\rho\dot{v}_1h_1\,,$$

$$\frac{1}{h_2}\frac{\partial}{\partial x^1}(h_1^2h_3\sigma_{12})+\frac{\partial}{\partial x^2}(h_1h_3\sigma_{22})+\frac{1}{h_2}\frac{\partial}{\partial x^3}(h_2^2h_1\sigma_{23})$$

$$-h_3\frac{\partial h_1}{\partial x^2}\sigma_{11}-h_1\frac{\partial h_3}{\partial x^2}\sigma_{33}+h_1h_2h_3X_2=\rho\dot{v}_2h_2\,,$$

$$\frac{1}{h_3}\frac{\partial}{\partial x^1}(h_2h_3^2\sigma_{13})+\frac{1}{h_2}\frac{\partial}{\partial x^2}(h_1h_3^2\sigma_{23})-\frac{\partial}{\partial x^3}(h_1h_2\sigma_{33})$$

$$-h_2\frac{\partial h_1}{\partial x^3}\sigma_{11}-h_1\frac{\partial h_2}{\partial x^3}\sigma_{22}+h_1h_2h_3X_3=\rho\dot{v}_3h_3\,, \tag{3.6}$$

where ρ is the mass density and X_i is the body force per unit volume.

Equations (3.4), (3.5) and (3.6) involve the u_i, the ϵ_{ij} and the σ_{ij} for a total of fifteen unknowns. The equations (3.6) may be written in terms of displacements by using equations (3.4) and (3.5) to obtain stress-displacement relations which in turn may be used with (3.6) to eliminate the stresses. The displacements which satisfy the resulting equation provide a complete description of the stresses as well, since the stress-displacement equations are available. If the displacements, rather than the stresses, are to be eliminated we must enlarge the set of equations which must be satisfied by adjoining the compatibility equations [34] to the set (3.4), (3.5) and (3.6).

In either event, the solution for thin shells usually leads to difficulties in satisfying the boundary conditions. In the event that the exact state of stress across the thickness of the shell is of little interest, a more tractable theory may be developed. It is known as the bending theory of thin elastic shells.

Before closing this section we shall introduce the Gauss and the Mainardi-Codazzi relations for the middle surface. They will be of use later, and are recorded here respectively for reference:

$$\frac{\partial}{\partial x^1}\left(\frac{1}{\alpha_1}\frac{\partial \alpha_2}{\partial x^1}\right) + \frac{\partial}{\partial x^2}\left(\frac{1}{\alpha_2}\frac{\partial \alpha_1}{\partial x^2}\right) = -\alpha_1 \alpha_2 \kappa_1 \kappa_2 , \tag{3.7}$$

$$\frac{\partial}{\partial x^1}(\alpha_2 \kappa_2) = \kappa_1 \frac{\partial \alpha_2}{\partial x^1} , \tag{3.8}$$

$$\frac{\partial}{\partial x^2}(\alpha_1 \kappa_1) = \kappa_1 \frac{\partial \alpha_1}{\partial x^2} , \tag{3.9}$$

in which

$$\kappa_\alpha = \frac{1}{R_\alpha} , \qquad \alpha = 1, 2 \tag{3.10}$$

From (3.7) and (3.8) it follows that

$$\frac{1}{h_1}\frac{\partial h_2}{\partial x^1} = \frac{1}{\alpha_1}\frac{\partial \alpha_2}{\partial x^1}$$

and

$$\frac{1}{h_2}\frac{\partial h_1}{\partial x^2} = \frac{1}{\alpha_2}\frac{\partial \alpha_1}{\partial x^2} \tag{3.11}$$

4. Resultants The simplification of the problem affected by this theory is primarily due to the introduction of stress couples and stress resultants. They are defined as

$$N_{11} = \int_{-\frac{h}{2}}^{\frac{h}{2}} \sigma_{11} \left(1 + \frac{x^3}{R_2}\right) dx^3$$

$$N_{22} = \int_{-\frac{h}{2}}^{\frac{h}{2}} \sigma_{22} \left(1 + \frac{x^3}{R_1}\right) dx^3$$

$$N_{21} = \int_{-\frac{h}{2}}^{\frac{h}{2}} \sigma_{12} \left(1 + \frac{x^3}{R_1}\right) dx^3$$

$$N_{12} = \int_{-\frac{h}{2}}^{\frac{h}{2}} \sigma_{12} \left(1 + \frac{x^3}{R_2}\right) dx^3$$

$$Q_{22} = \int_{-\frac{h}{2}}^{\frac{h}{2}} \sigma_{23} \left(1 + \frac{x^3}{R_1}\right) dx^3$$

$$Q_{11} = \int_{-\frac{h}{2}}^{\frac{h}{2}} \sigma_{13} \left(1 + \frac{x^3}{R_2}\right) dx^3 \qquad (3.12)$$

$$M_{11} = \int_{-\frac{h}{2}}^{\frac{h}{2}} \sigma_{11} \left(1 + \frac{x^3}{R_2}\right) x^3 \, dx^3$$

$$M_{22} = \int_{-\frac{h}{2}}^{\frac{h}{2}} \sigma_{22} \left(1 + \frac{x^3}{R_1}\right) x^3 \, dx^3$$

$$M_{21} = \int_{-\frac{h}{2}}^{\frac{h}{2}} \sigma_{12} \left(1 + \frac{x^3}{R_1}\right) x^3 \, dx^3$$

$$M_{12} = \int_{-\frac{h}{2}}^{\frac{h}{2}} \sigma_{12} \left(1 + \frac{x^3}{R_2}\right) x^3 \, dx^3 \qquad (3.13)$$

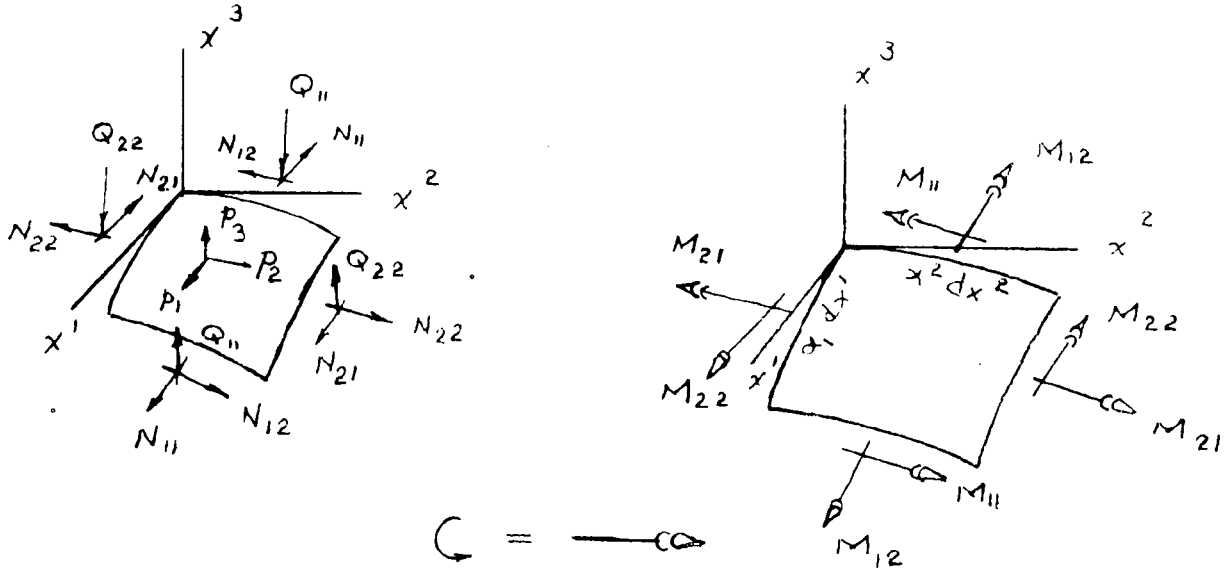

figure 3

The $N_{\alpha\beta}$ are the stress resultants, or membrane forces, and have the dimensions of force per unit length; the $M_{\alpha\beta}$ are stress couples, or bending moments, and have the dimensions of moment per unit length; the Q_{11} and Q_{22} are shear resultants, or shear forces, and have the dimensions of force per unit length. The stress couples are so defined that a positive moment gives a positive stress on the positive side of the middle surface; i.e., the side corresponding to $x^3 > 0$.

5. Equation of Equilibrium in Terms of Resultants

The macroscopic equations of equilibrium may be derived by integrating microscopic equations of equilibrium (3.6) over the thickness of the shell, or by considering an element of the shell and equating forces and moments. The former method shows that the macroscopic equations of equilibrium are

$$\frac{\partial}{\partial x^1}(\alpha_2 N_{11}) + \frac{\partial}{\partial x^2}(\alpha_1 N_{21}) + N_{12}\frac{\partial \alpha_1}{\partial x^2} - N_{22}\frac{\partial \alpha_2}{\partial x^1}$$

$$+ \alpha_1 \alpha_2 \kappa_1 Q_{11} + \alpha_1 \alpha_2 P_1 = 0 ,$$

$$\frac{\partial}{\partial x^1}(\alpha_2 N_{12}) + \frac{\partial}{\partial x^2}(\alpha_1 N_{22}) + N_{21}\frac{\partial \alpha_2}{\partial x^1} - N_{11}\frac{\partial \alpha_1}{\partial x^2}$$

$$+ \alpha_1 \alpha_2 \kappa_2 Q_{22} + \alpha_1 \alpha_2 P_2 = 0 ,$$

$$\frac{\partial}{\partial x^1}(\alpha_2 Q_{11}) + \frac{\partial}{\partial x^2}(\alpha_1 N_{22}) + \alpha_1 \alpha_2 (N_{11}\kappa_1 + N_{22}\kappa_2) + \alpha_1 \alpha_2 P_3 = 0 \,, \tag{3.14}$$

in which

$$P_1 = \frac{1}{\alpha_1 \alpha_2}\left\{ h_1 h_2 \sigma_{13}\Big|_{-\frac{h}{2}}^{\frac{h}{2}} + \int_{-\frac{h}{2}}^{\frac{h}{2}} \rho h_1 h_2 X_1 \, dx^3 \right\} ,$$

$$P_2 = \frac{1}{\alpha_1 \alpha_2}\left\{ h_1 h_2 \sigma_{23}\Big|_{-\frac{h}{2}}^{\frac{h}{2}} + \int_{-\frac{h}{2}}^{\frac{h}{2}} \rho h_1 h_2 X_2 \, dx^3 \right\} ,$$

$$P_3 = \frac{1}{\alpha_1 \alpha_2}\left\{ h_1 h_2 \sigma_{33}\Big|_{-\frac{h}{2}}^{\frac{h}{2}} + \int_{-\frac{h}{2}}^{\frac{h}{2}} \rho h_1 h_2 X_3 \, dx^3 \right\} , \tag{3.15}$$

where the definitions in (3.12) have been used, and where the P_1, P_2, and P_3 may be considered as components of an averaged or effective force vector (force per unit area) applied at the middle surface.

By multiplying the first two of equations (3.6) by x^3 and integrating over the shell thickness one obtains

$$\frac{\partial}{\partial x^1}(\alpha_2 M_{11}) + \frac{\partial}{\partial x^2}(\alpha M_{21}) + M_{12}\frac{\partial \alpha_1}{\partial x^2} - M_{22}\frac{\partial \alpha_2}{\partial x^1}$$

$$-\alpha_1\alpha_2 Q_{11} + \alpha_1\alpha_2 m_1 = 0,$$

$$\frac{\partial}{\partial x^1}(\alpha_2 M_{12}) + \frac{\partial}{\partial x^2}(\alpha_1 M_{22}) + M_{21}\frac{\partial \alpha_2}{\partial x^1} - M_{11}\frac{\partial \alpha_1}{\partial x^2}$$

$$-\alpha_1\alpha_2 Q_{22} - \alpha_1\alpha_2 m_2 = 0, \qquad (3.16)$$

in which

$$m_1 = \frac{1}{\alpha_1\alpha_2}\left\{x^3 h_1 h_2 \sigma_{13}\Big|_{-\frac{h}{2}}^{\frac{h}{2}} + \int_{-\frac{h}{2}}^{\frac{h}{2}} \rho h_1 h_2 x^3 X_1\, dx^3\right\},$$

and

$$m_2 = \frac{1}{\alpha_1\alpha_2}\left\{x^3 h_1 h_2 \sigma_{23}\Big|_{-\frac{h}{2}}^{\frac{h}{2}} + \int_{-\frac{h}{2}}^{\frac{h}{2}} \rho h_1 h_2 x^3 X_2\, dx^3\right\}, \qquad (3.17)$$

and in which m_1 and m_2 may be regarded as components of a two dimentional vector, having dimensions of force per unit area and being applied to the middle surface. They are usually of high enough order to be neglected with respect to the other terms in (3.16).

The third equation of equilibrium yields quantities which are important when the effect of shear deformation is included in the theory. Consequently we shall not consider the third equation of (3.6). A third equation, from the summation of the moments about the x^3 axis has been developed by Byrne [35] but it is no more than an identity and will be of no use here.

6. Further Assumptions To develope the classical theory of shells it is necessary to add the following assumptions:

a) The ratio of the thickness h to the least radius of curvature[3] (see P. 27), denoted by R_{min}, is

$$h/R_{min} << 1.$$

b) The transverse normal stress σ_{33} is such that

$$|\sigma_{33}| << |\sigma_{11}|, \quad |\sigma_{33}| << |\sigma_{22}|.$$

c) The normals to the undeformed middle surface remain straight and are normal to the deformed middle surface. (This implies neglect of shear deformation.)

Expansion of $\bar{u}_i$ in terms of x^3 and retention of the first two terms of the Taylor series leads to a set of displacements which are consistent with the above assumptions. The displacements are then of the form

$$\bar{u}_1(x^i) = u_1(x^\alpha) + x^3 \frac{\partial}{\partial x^3} u_1(x^\alpha),$$

$$\bar{u}_2(x^i) = u_2(x^\alpha) + x^3 \frac{\partial}{\partial x^3} u_2(x^\alpha),$$

$$\bar{u}_3(x^i) = u_3(x^\alpha) + x^3 \frac{\partial}{\partial x^3} u_3(x^\alpha), \qquad (3.18)$$

---

[3] Since R_1 and R_2 are the extreme of the radii of curvature at each point, R_{min} is the smaller of R_1 and R_2.

where

$$\alpha = 1, 2 \quad , \qquad i = 1, 2, 3 \, ,$$

and the displacement of any point in the shell is not related to the displacement of that point on the middle surface whose normal contains the point in question, and to the normal derivative of this displacement.

In accordance with the observation the

$$x^3 \frac{\partial u_3}{\partial x^3}$$

is small, in general, compared to u_3, it is neglected in the classical theory in the third equations of (3.18). This neglect implies that $\epsilon_{33} = 0$. The stress-strain relation that would demand that $\sigma_{33} = 0$ as a consequence of $\epsilon_{33} = 0$ is ignored.

We may evaluate the normal derivatives which occur in equations (3.18) by substituting into fifth and sixth of equations (3.5). Thus

$$\epsilon_{13} = \frac{1}{2} \frac{\alpha_1}{h_1} \left\{ \frac{\partial u_1}{\partial x^3} - \kappa_1 u_1 + \frac{1}{\alpha_1} \frac{\partial u_3}{\partial x^1} \right\}$$

$$\epsilon_{23} = \frac{1}{2} \frac{\alpha_2}{h_2} \left\{ \frac{\partial u_2}{\partial x^3} - \kappa_2 u_2 + \frac{1}{\alpha_2} \frac{\partial u_3}{\partial x^1} \right\} \qquad (3.19)$$

but since $\epsilon_{13} = \epsilon_{23} = 0$ as a consequence of the assumption (c) on p. 32, (3.19) is equivalent to

$$\frac{\partial u_1}{\partial x^3} = \kappa_1 u_1 - \frac{1}{\alpha_1} \frac{\partial u_3}{\partial x^1}$$

and

$$\frac{\partial u_2}{\partial x^3} = \kappa_2 u_2 - \frac{1}{\alpha_2} \frac{\partial u_3}{\partial x^2} \tag{3.20}$$

Hence the displacements are given by (3.21).

$$\hat{u}_1 = (1 + x^3 \kappa_1) u_1 - \frac{x^3}{\alpha_1} \frac{\partial u_3}{\partial x^1},$$

$$\hat{u}_2 = (1 + x^3 \kappa_2) u_2 - \frac{x^3}{\alpha_2} \frac{\partial u_3}{\partial x^2},$$

and

$$\hat{u}_3 = u_3 . \tag{3.21}$$

7. Stress-Strain Relations In view of the foregoing discussion the stress-strain relations become

$$\sigma_{11} = \frac{E}{1-\nu^2} (\epsilon_{11} + \nu \epsilon_{22}),$$

$$\sigma_{22} = \frac{E}{1-\nu^2} (\epsilon_{22} + \nu \epsilon_{11}),$$

$$\sigma_{12} = \frac{E}{1+\nu} \epsilon_{12} . \tag{3.22}$$

These relations are more convenient in shell theory if written in terms of the resultants and displacements or resultants and curvatures. In the classical theory Love's first approximation is introduced to simplify the resultant-displacement relations or the resultant-curvature relations. The approximation is that one may neglect $x^3 \kappa_1$, and $x^3 \kappa_2$ compared to unity in equations (3.5), (3.12) and (3.13), based upon the assumption (a) of section 6. Thus

$$h_1 = \alpha_1 (1 + x^3 \kappa_1) \simeq \alpha_1$$

$$h_2 = \alpha_2 (1 + x^3 \kappa_2) \simeq \alpha_2. \qquad (3.23)$$

This approximation is especially good for spherical shells since it has been shown that [35, 36] if terms up to the third order in $x^3 \kappa_1$ and $x^3 \kappa_2$ are retained the additional terms included vanish when the two principle curvatures are equal. Utilization of Love's first approximation results in

$$N_{11} = \frac{Eh}{1-\nu^2} (\epsilon_{11} + \nu \epsilon_{22}),$$

$$N_{22} = \frac{Eh}{1-\nu^2} (\epsilon_{22} + \nu \epsilon_{11}),$$

$$N_{12} = N_{21} = \frac{Eh}{2(1+\nu)} \epsilon_{12}, \qquad (3.24)$$

and in

$$M_{11} = D (\kappa_{11} + \nu \kappa_{22}),$$

$$M_{22} = D (\kappa_{22} + \nu \kappa_{11}),$$

$$M_{12} = M_{21} = \frac{D(1-\nu)}{2} \kappa_{12} \qquad (3.25$$

in which $$D = \frac{E h^3}{12(1-\nu^2)}$$

and where

$$\epsilon_{11} = \frac{1}{\alpha_1} \frac{\partial u_1}{\partial x^1} + \frac{u_2}{\alpha_1 \alpha_2} \frac{\partial \alpha_2}{\partial x^2} + \kappa_1 u_3 ,$$

$$\epsilon_{22} = \frac{u_1}{\alpha_1 \alpha_2} \frac{\partial \alpha_2}{\partial x^1} + \frac{1}{\alpha_1} \frac{\partial u_2}{\partial x^2} + \kappa_2 u_3 ,$$

and

$$\epsilon_{12} = \frac{\alpha_2}{\alpha_1} \frac{\partial}{\partial x^1}\left(\frac{u_2}{\alpha_2}\right) + \frac{\alpha_1}{\alpha_2} \frac{\partial}{\partial x^2}\left(\frac{u_1}{\alpha_1}\right). \qquad (3.26)$$

In (3.25) the quantities $\kappa_{\alpha\beta}$, $\alpha, \beta = 1, 2$ are defined as follows:

$$\kappa_{11} = \frac{1}{\alpha_1} \frac{\partial}{\partial x^1}\left(u_1 \kappa_1 - \frac{1}{\alpha_1} \frac{\partial u_3}{\partial x^1}\right)$$

$$+ \frac{1}{\alpha_1 \alpha_2}\left(u_2 \kappa_2 - \frac{1}{\alpha_2} \frac{\partial u_3}{\partial x^2}\right) \frac{\partial \alpha_1}{\partial x^2} ,$$

$$\kappa_{22} = \frac{1}{\alpha_2} \frac{\partial}{\partial x^2}\left(u_2 \kappa_2 - \frac{1}{\alpha_2} \frac{\partial u_3}{\partial x^2}\right)$$

$$+ \frac{1}{\alpha_1 \alpha_2}\left(u_1 \kappa_1 - \frac{1}{\alpha_1} \frac{\partial u_3}{\partial x^1}\right) \frac{\partial \alpha_2}{\partial x^1} , \qquad (3.27)$$

and

$$\kappa_{12} = \frac{1}{\alpha_1}\frac{\partial}{\partial x^1}\left(u_2\kappa_2 - \frac{1}{\alpha_2}\frac{\partial u_3}{\partial x^2}\right) - \frac{1}{\alpha_1\alpha_2}\left(u_2\kappa_2 - \frac{1}{\alpha_2}\frac{\partial u_3}{\partial x^2}\right)\frac{\partial \alpha_2}{\partial x^1}$$

$$+ \frac{1}{\alpha_2}\frac{\partial}{\partial x^2}\left(u_1\kappa_1 - \frac{1}{\alpha_1}\frac{\partial u_3}{\partial x^1}\right) - \frac{1}{\alpha_1\alpha_2}\left(u_1\kappa_1 - \frac{1}{\alpha_1}\frac{\partial u_3}{\partial x^1}\right)\frac{\partial \alpha_1}{\partial x^2}, \qquad (3.26)$$

in which the $\epsilon_{\alpha\beta}$ are physical components of the middle surface strain tensor and the $\kappa_{\alpha\beta}$ are the physical components of the curvature tensor.

8. Spherical Shells The foregoing equations may be specialized to spherical shells in a straightforward manner. In spherical coordinates the line element is given by

$$(ds)^2 = a^2\left(1+\frac{x^3}{a}\right)(d\varphi)^2 + a^2\left(1+\frac{x^3}{a}\right)(\sin\varphi\, d\theta)^2 + (dx^3)^2$$

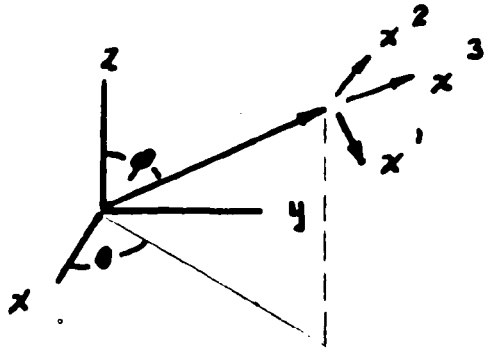

figure 4

in which

a = radius of the sphere

φ = declination angle

θ = polar angle

as illustrated in figure 4. It is apparent from (3.27) that

$$\alpha_1 = a, \qquad \alpha_2 = a \sin\varphi$$

$$R_1 = R_2 = a,$$

$$\kappa_1 = \kappa_2 = \kappa = \frac{1}{a},$$

and

$$x^1 = \varphi, \qquad x^2 = \theta. \tag{3.27}$$

9. Equations of Equilibrium The equations of equilibrium in terms of resultants are obtained by substituting the relations from (3.27) into the equations (3.14) and (3.15). The final expressions in terms of the stress resultants, moment resultants, and shear resultants are given in (3.28).

$$\frac{\partial}{\partial\varphi}(\sin\varphi N_{11}) + \frac{\partial N_{12}}{\partial\theta} - N_{22}\cos\varphi + Q_{11}\sin\varphi + a p_1 \sin\varphi = 0,$$

$$\frac{\partial}{\partial\varphi}(\sin\varphi N_{12}) + \frac{\partial N_{22}}{\partial\theta} + N_{12}\cos\varphi + Q_{22}\sin\varphi + a p_2 \sin\varphi = 0,$$

$$\frac{\partial}{\partial \varphi}(\sin\varphi\, Q_{11}) + \frac{\partial}{\partial \theta} Q_{22} - (N_{11} + N_{22})\sin\varphi + a \sin\varphi\, p_3 = 0,$$

$$\frac{\partial}{\partial \varphi}(\sin\varphi\, M_{11}) + \frac{\partial M_{12}}{\partial \theta} - M_{22}\cos\varphi - a Q_{11}\sin\varphi = 0,$$

and

$$\frac{\partial}{\partial \varphi}(\sin\varphi\, M_{12}) + \frac{\partial M_{22}}{\partial \theta} + M_{12}\cos\varphi - a Q_{22}\sin\varphi = 0. \tag{3.28}$$

In (3.28) p_1, p_2, and p_3 include the inertia forces as well as any other body forces.

10. Stress-Strain and Moment-Curvature Relations By the same substitution it is found that

$$N_{11} = \frac{Eh}{1-\nu^2}(\epsilon_{11} + \nu\,\epsilon_{22}),$$

$$N_{22} = \frac{Eh}{1-\nu^2}(\epsilon_{22} + \nu\,\epsilon_{11}),$$

and

$$N_{12} = N_{21} = \frac{E}{2(1+\nu)}\epsilon_{12} \tag{3.29}$$

and that

$$M_{11} = D(\kappa_{11} + \nu\kappa_{22}),$$

$$M_{22} = D(\kappa_{22} + \nu\kappa_{11}),$$

and

$$M_{12} = M_{21} = \frac{D(1-\nu)}{2}\kappa_{12}. \tag{3.30}$$

11. Strain and Curvature-Displacement Relations

Similarly one has that, after specializing to the spherical coordinate system, the strain displacement relations are given by (3.31) and that the curvature displacement relations are given by equations (3.32).

$$\epsilon_{11} = \frac{1}{a}\left(\frac{\partial u_1}{\partial \varphi} + u_3\right),$$

$$\epsilon_{22} = \frac{1}{a}\left(u_1 \operatorname{ctn}\varphi + \frac{1}{\sin\varphi}\frac{\partial u_2}{\partial \theta} + u_3\right),$$

$$\epsilon_{12} = \frac{1}{a}\left(\frac{\partial u_2}{\partial \varphi} - u_2 \operatorname{ctn}\varphi + \frac{1}{\sin\varphi}\frac{\partial u_1}{\partial \theta}\right),$$

$$\kappa_{11} = \frac{1}{a^2}\left(\frac{\partial u_1}{\partial \varphi} - \frac{\partial^2 u_3}{\partial \varphi^2}\right),$$

$$\kappa_{22} = \frac{1}{a^2}\left(u_1 \operatorname{ctn}\varphi + \frac{1}{\sin\varphi}\frac{\partial u_2}{\partial \theta}\right.$$

$$- \frac{1}{\sin^2\varphi} \frac{\partial^2 u_3}{\partial\theta^2} - \operatorname{ctn}\varphi \frac{\partial u_3}{\partial\varphi} \Big).$$

and

$$\kappa_{12} = \frac{2}{a^2}\Big(\frac{\cos\varphi}{\sin^2\varphi} \frac{\partial u_3}{\partial\theta} - \frac{1}{\sin\varphi} \frac{\partial^2 u_3}{\partial\varphi\,\partial\theta}$$

$$+ \frac{1}{a^2}\Big(\frac{\partial u_2}{\partial\varphi} - u_2 \operatorname{ctn}\varphi + \frac{1}{\sin\varphi} \frac{\partial u_1}{\partial\theta} \Big), \qquad (3.31)$$

in which u_1 is the displacement in the φ direction, u_2 is the displacement in the θ direction, and u_3 is the displacement in the r direction.

12. Shallow Spherical Shell The results given in sections 9 through 13 inclusive may be further simplified when the discussion is restricted to the case of shallow spherical shells. A shell is said to be shallow when

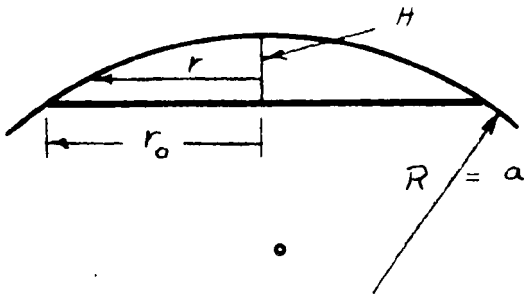

figure 5

$$\frac{H}{r_o} << 1$$

where the quantities are as shown in figure 5. This is equivalent to the condition that

$$\frac{r_o}{R} << 1$$

If, in view of the approximation for shallow shells,

$$u_r/R \qquad \text{and} \qquad u_\theta/R$$

are neglected with respect to other terms in the strain-displacement relations and in the curvature-displacement relations, and if we use the relations

$$\sin\varphi \simeq \varphi = \frac{r}{a}\,,$$

$$\cos\varphi \simeq 1\,, \qquad \frac{\partial}{\partial\varphi} = a\frac{\partial}{\partial r} \tag{3.33}$$

then the preceeding equations may be written as follows:

13. Equibibrium Equations

$$\frac{\partial}{\partial r}(r N_{rr}) + \frac{\partial N_{r\theta}}{\partial\theta} - N_{\theta\theta} + r(X_r - \rho h \ddot{u}_r) = 0\,,$$

$$\frac{\partial}{\partial r}(r N_{r\theta}) + \frac{\partial N_{\theta\theta}}{\partial\theta} + N_{r\theta} + r(X_\theta - \rho h \ddot{u}_\theta) = 0\,,$$

$$\frac{\partial}{\partial r}(r Q_{rr}) + \frac{\partial}{\partial\theta} Q_{\theta\theta} - \frac{r}{R}(N_{rr} + N_{\theta\theta}) + r(X_3 - \rho h \ddot{u}_3) = 0\,,$$

$$\frac{\partial}{\partial r}(r M_{rr}) + \frac{\partial}{\partial \theta} M_{r\theta} - {}^{\circ}M_{\theta\theta} - r Q_{rr} = 0,$$

and

$$\frac{\partial}{\partial r}(r M_{r\theta}) + \frac{\partial M_{\theta\theta}}{\partial \theta} + M_{r\theta} - r Q_{\theta\theta} = 0. \tag{3.34}$$

The body forces have been written as

$$\begin{aligned} p_r &= X_r - \rho h \ddot{u}_r, \\ p_\theta &= X_\theta - \rho h \ddot{u}_\theta, \\ p_3 &= X_3 - \rho h \ddot{u}_3. \end{aligned} \tag{3.35}$$

14. Strain-Displacement Relations The strain-displacement relations are

$$\epsilon_{rr} = {}^{\circ}\frac{\partial u_r}{\partial r} + \frac{u_3}{R},$$

$$\epsilon_{\theta\theta} = \frac{u_r}{r} + \frac{1}{r}\frac{\partial u_\theta}{\partial \theta} + \frac{u_3}{R},$$

and

$$\epsilon_{r\theta} = r\frac{\partial}{\partial r}\left(\frac{u_\theta}{r}\right) + \frac{1}{r}\frac{\partial u_r}{\partial \theta}. \tag{3.36}$$

15. Curvature-Displacement Relations

$$\kappa_{rr} = -\frac{\partial^2 u_3}{\partial r^2}$$

$$\kappa_{\theta\theta} = -\frac{1}{r^2}\frac{\partial^2 u_3}{\partial \theta^2} - \frac{1}{r}\frac{\partial u_3}{\partial r}$$

$$\kappa_{r\theta} = 2\left(\frac{1}{r^2}\frac{\partial u_3}{\partial \theta} - \frac{1}{r}\frac{\partial^2 u_3}{\partial r \partial \theta}\right) \tag{3.37}$$

16. Moment-Curvature Relations

$$M_{rr} = D\left(\kappa_{rr} + \nu \kappa_{\theta\theta}\right)$$

$$M_{\theta\theta} = D\left(\kappa_{\theta\theta} + \nu \kappa_{rr}\right)$$

$$M_{r\theta} = M_{\theta r} = \frac{D(1-\nu)}{2}\kappa_{r\theta} \tag{3.38}$$

It should be noted that in the above four sections we have replaced u_1 and u_2 by u_r and u_θ respectively, with corresponding changes in the associated quantities.

Equations (3.34) through (3.38) could have been derived in terms of rectangular Cartesian coordinates, although the above derivation is to be preferred in that it clearly shows the relation between the equations governing shallow spherical shells and the general shell equations. In rectangular Cartesian coordinates the equations are

$$\frac{\partial N_{xx}}{\partial x} + \frac{\partial N_{xy}}{\partial y} = \rho h \ddot{u}_x ,$$

$$\frac{\partial N_{xy}}{\partial x} + \frac{\partial N_{yy}}{\partial y} = \rho h \ddot{u}_y ,$$

$$\frac{\partial Q_{xx}}{\partial x} + \frac{\partial Q_{yy}}{\partial y} + \frac{\partial}{\partial x}\left[\frac{\partial z}{\partial x} N_{xx} + \frac{\partial z}{\partial y} N_{xy}\right]$$

$$+ \frac{\partial}{\partial y}\left[\frac{\partial z}{\partial x} N_{xy} + \frac{\partial z}{\partial y} N_{yy}\right] = \rho h \ddot{u}_3 ,$$

$$\frac{\partial M_{xx}}{\partial x} + \frac{\partial M_{xy}}{\partial y} - Q_{xx} = 0 ,$$

$$\frac{\partial M_{xy}}{\partial x} + \frac{\partial M_{yy}}{\partial y} - Q_{yy} = 0 . \qquad (3.39)$$

We shall combine equations (3.37) and (3.38) and use the relations that

$$\frac{\partial}{\partial r} = \cos\theta \frac{\partial}{\partial x} + \sin\theta \frac{\partial}{\partial y}$$

and $$\frac{1}{r}\frac{\partial}{\partial \theta} = -\sin\theta \frac{\partial}{\partial x} + \cos\theta \frac{\partial}{\partial y}$$

to show that the moment-displacement relations become, in rectangular coordinates,

$$M_{xx} = -D\left(\frac{\partial^2 u_3}{\partial x^2} + \nu \frac{\partial^2 u_3}{\partial y^2}\right),$$

$$M_{yy} = -D\left(\frac{\partial^2 u_3}{\partial y^2} + \nu \frac{\partial^2 u_3}{\partial x^2}\right),$$

$$M_{xy} = -D(1-\nu)\frac{\partial^2 u_3}{\partial x \partial y}. \qquad (3.40)$$

Substitution of (3.36) into (3.29) gives

$$\frac{\partial u_x}{\partial x} + \frac{\partial z}{\partial x}\frac{\partial u_3}{\partial x} = \frac{N_{xx} - \nu N_{yy}}{Eh},$$

$$\frac{\partial u_y}{\partial y} + \frac{\partial z}{\partial y}\frac{\partial u_3}{\partial y} = \frac{N_{yy} - \nu N_{xx}}{Eh},$$

and

$$\frac{\partial u_x}{\partial y} + \frac{\partial u_y}{\partial x} + \frac{\partial z}{\partial x}\frac{\partial u_3}{\partial y} + \frac{\partial z}{\partial y}\frac{\partial u_3}{\partial x} = \frac{N_{xy}}{\mu h}, \qquad (3.41)$$

in which

$$\ddot{(\,)} \equiv \frac{\partial^2 (\,)}{\partial t^2}$$

and h in the shell thickness and where u_x is the displacement in the x direction, u_y the displacement in the y direction, and u_3 the displacement in the z direction. The middle surface of the shell is given by the relation

$$z = z(x, y).$$

The equations in the form (3.39) through (3.41) are due to Marguerre [37]. They may be combined to give three simultaneous equations for the displacements u_x, u_y, and u_3. For the case where E and h are constant these equations are

$$\frac{1-\nu}{2} \nabla^2 u_x + \frac{1+\nu}{2} \frac{\partial}{\partial x} \left(\frac{\partial u_x}{\partial x} + \frac{\partial u_y}{\partial y} \right)$$

$$+ \frac{1-\nu}{2} \left(\frac{\partial z}{\partial x} \nabla^2 u_3 + \frac{\partial u_3}{\partial x} \nabla^2 z \right)$$

$$+ \frac{1+\nu}{2} \frac{\partial}{\partial x} \left(\frac{\partial z}{\partial x} \frac{\partial u_3}{\partial x} + \frac{\partial z}{\partial y} \frac{\partial u_3}{\partial y} \right), \quad (3.42)$$

$$= \frac{\rho}{E} \ddot{u}_x,$$

$$\frac{1-\nu}{2}(\nabla^2 u_y) + \frac{1+\nu}{2}\frac{\partial}{\partial y}\left(\frac{\partial u_x}{\partial x} + \frac{\partial u_y}{\partial y}\right)$$

$$+ \frac{1-\nu}{2}\left(\frac{\partial z}{\partial y}\nabla^2 u_3 + \frac{\partial u_3}{\partial y}\nabla^2 z\right)$$

$$+ \frac{1+\nu}{2}\frac{\partial}{\partial y}\left(\frac{\partial z}{\partial x}\frac{\partial u_3}{\partial x} + \frac{\partial z}{\partial y}\frac{\partial u_3}{\partial y}\right)$$

$$= \frac{\rho}{E}\ddot{u}_y, \qquad (3.43)$$

and

$$-D\nabla^4 u_3 + \frac{Eh}{1-\nu^2}\left\{\frac{\partial^2 z}{\partial x^2}\left[\frac{\partial u_x}{\partial x} + \frac{\partial z}{\partial x}\frac{\partial u_3}{\partial x}\right.\right.$$

$$+ \nu\left(\frac{\partial u_y}{\partial y} + \frac{\partial z}{\partial y}\frac{\partial u_3}{\partial y}\right)$$

$$+ \frac{\partial^2 z}{\partial y^2}\left[\frac{\partial u_y}{\partial y} + \frac{\partial z}{\partial y}\frac{\partial u_3}{\partial y} + \nu\left(\frac{\partial u_x}{\partial x} + \frac{\partial z}{\partial x}\frac{\partial u_3}{\partial x}\right)\right.$$

$$\left.\left. + (1-\nu)\frac{\partial^2 z}{\partial x\,\partial y}\left[\frac{\partial u_x}{\partial y} + \frac{\partial u_y}{\partial x} + \frac{\partial z}{\partial x}\frac{\partial u_3}{\partial y} + \frac{\partial z}{\partial y}\frac{\partial u_3}{\partial x}\right]\right.\right.$$

$$= \rho h \left[\ddot{u}_3 - \frac{\partial z}{\partial x} \ddot{u}_x - \frac{\partial z}{\partial y} \ddot{u}_y \right], \quad (3.44)$$

in which

$$\nabla^2 = \frac{\partial^2}{\partial x^2} + \frac{\partial^2}{\partial y^2} .$$

These are the equations of motion for shallow shells.

17. Basic Equations for Shallow Shells with Longitudinal Inertia Neglected As has been pointed out by Reissner [38] an appreciable simplification may be effected by using two simultaneous equations for the displacement u_3 and for an Airy stress function F instead of three simultaneous equations for the three displacements. It has also been shown that for certain classes of dynamic problems one may neglect the longitudinal inertia terms $\ddot{u}_x$ and $\ddot{u}_y$, so that the use of Airy's stress function is indeed possible in the solution of these problems. In section 19 we shall examine the argument which leads to the neglect of longitudinal inertia in that class of problems in which the vibrations are primarily transverse. This neglect does not rule out the possibility that longitudinal straining may have a profound influence upon the dynamic response.

Having neglected the longitudinal inertia terms $\ddot{u}_x$ and $\ddot{u}_y$ let us introduce the Airy stress function F defined by the relations

$$N_{xx} = \frac{\partial^2 F}{\partial y^2}, \quad N_{yy} = \frac{\partial^2 F}{\partial x^2}, \quad N_{xy} = -\frac{\partial^2 F}{\partial x \partial y} \tag{3.45}$$

and substitute (3.45) and (3.41) into the compatibility equation

$$\frac{\partial^2}{\partial y^2}\left(\frac{\partial u_x}{\partial x} + \frac{\partial z}{\partial x}\frac{\partial u_3}{\partial x}\right) + \frac{\partial^2}{\partial x^2}\left(\frac{\partial u_y}{\partial y} + \frac{\partial z}{\partial y}\frac{\partial u_3}{\partial y}\right)$$

$$-\frac{\partial^2}{\partial x \partial y}\left(\frac{\partial u_x}{\partial y} + \frac{\partial u_y}{\partial x} + \frac{\partial z}{\partial x}\frac{\partial u_3}{\partial y} + \frac{\partial z}{\partial y}\frac{\partial u_3}{\partial x}\right)$$

$$= 2\frac{\partial^2 z}{\partial x \partial y}\frac{\partial^2 u_3}{\partial x \partial y} - \frac{\partial^2 z}{\partial x^2}\frac{\partial^2 u_3}{\partial y^2} - \frac{\partial^2 z}{\partial y^2}\frac{\partial^2 u_3}{\partial x^2} \tag{3.46}$$

to obtain

$$\nabla^4 F = Eh\left\{2\frac{\partial^2 z}{\partial x \partial y}\frac{\partial^2 u_3}{\partial x \partial y} - \frac{\partial^2 z}{\partial x^2}\frac{\partial^2 u_3}{\partial y^2} - \frac{\partial^2 z}{\partial y^2}\frac{\partial^2 u_3}{\partial x^2}\right\} \tag{3.47}$$

Substitution of (3.39_4) and (3.39_5) as well as (3.40) and (3.45) into (3.39_3) gives

$$D\nabla^4 u_3 + \rho h \ddot{u}_3 = -2\frac{\partial^2 z}{\partial x \partial y}\frac{\partial^2 F}{\partial x \partial y} + \frac{\partial^2 z}{\partial x^2}\frac{\partial^2 F}{\partial y^2} + \frac{\partial^2 z}{\partial y^2}\frac{\partial^2 F}{\partial x^2}, \tag{3.48}$$

as the second of the two simultaneous equations for the two unknowns F and u_3.

18. Basic Equations for Shallow Spherical Shells, Longitudinal Inertia Neglected, General Coordinates

Within the framework of the assumptions of shallow spherical shells we may write the equation of the middle surface of the shallow spherical shell as [35]

$$z = \frac{r_o^2}{2R} - \frac{x^2 + y^2}{2R} = \frac{r_o^2 - r^2}{2R} \tag{3.49}$$

If we prohibit longitudinal loading, the differential equations for the displacement w in the z direction and the Airy stress function F are

$$D\nabla^4 w + \frac{1}{R}\nabla^2 F = -\rho h \ddot{w} + p \tag{3.50}$$

and

$$\nabla^4 F - \frac{hE}{R}\nabla^2 w = 0 \tag{3.51}$$

in which ρ is the density of the shell material, p is the normal surface load, and where r_o is the same as defined on p. 49 and shown in figure 5. Equations (3.50) and (3.51) were obtained by substituting (3.49) into (3.47) and (3.48).

19. Justification of the Neglect of Longitudinal Inertia The neglect of longitudinal inertia for a certain class of problems was originally suggested by Reissner [38]. In view of an apparent misinterpretation of the results, a reexamination of the analysis seems to be in order. The analysis is primarily one of dimension, and is predicated upon the equations (3.43), (3.42) and (3.44).

The following dimensionless variables are introduced, as suggested by Reissner [38], with the stipulation the f, q, k, ξ, τ and their derivatives range in value from zero to unity:

$$x = \hat{l}\,\xi \quad , \quad y = \hat{l}\,\eta \quad , \quad t = \frac{\hat{\tau}}{\omega} \quad , \tag{3.52}$$

$$\frac{d}{dx} = \frac{1}{\hat{l}}\frac{\partial}{\partial \xi} \quad , \quad \frac{d}{dt} = \omega \frac{d}{d\hat{\tau}} \quad , \tag{3.53}$$

$$w = W f \quad , \quad u = U q \quad , \quad v = V k \, . \tag{3.54}$$

For the parameters having to do with the shell geometry a different "normalizing length" is used. It is supposed to be a characteristic length L, which in the case of spherical shells will be taken as the radius R of the shell. We thus suppose that

$$x = L x \quad , \quad y = L y \quad , \quad z = H \zeta \quad , \tag{3.55}$$

and

$$\frac{d}{dx} \longrightarrow \frac{1}{L}\frac{d}{dx} \tag{3.56}$$

To be consistent with the above replacement scheme it will be necessary to have two representations of the operator ∇^2. Thus

$$\nabla^2 = \frac{1}{\hat{l}^2}\left(\frac{\partial^2}{\partial \xi^2} + \frac{\partial^2}{\partial \eta^2}\right)$$

when applied to f , q , or k ; and

$$\nabla^2 = \frac{1}{L^2}\left(\frac{\partial^2}{\partial x^2} + \frac{\partial^2}{\partial y^2}\right)$$

when applied to Z or ζ .

Substitution of (3.52), (3.53), (3.54), (3.55) and (3.56) into (3.42) through (3.44) inclusive gives relations of the form

$$\frac{U}{\hat{l}^2} q_{\xi\xi} + \frac{1-\nu}{2} \frac{U}{\hat{l}^2} q_{\eta\eta} + \frac{1+\nu}{2} \frac{V}{\hat{l}^2} k_{\eta\xi}$$

$$+ \frac{1-\nu}{2}\left[\frac{H}{L} \zeta_x \frac{W}{\hat{l}^2} f_{\eta\eta} + \frac{W}{\hat{l}} f_\xi \frac{H}{L^2} \zeta_{yy}\right]$$

$$+ \frac{H}{L} \zeta_x \frac{W}{\hat{l}^2} f_{\xi\xi} + \frac{W}{\hat{l}} f_\xi \frac{H}{L^2} \zeta_{xx}$$

$$+ \frac{1+\nu}{2}\left[\frac{H}{L^2} \zeta_{xy} \frac{W}{\hat{l}} f_\eta + \frac{H}{L} \zeta_y \frac{W}{\hat{l}^2} f_{\eta\eta}\right]$$

$$= \frac{\rho\omega^2}{E} U q_{\tau\tau} \qquad (3.57)$$

and

$$-D\frac{W}{\hat{l}^4}\nabla^4 f + \frac{Eh}{1-\nu^2}\left\{\frac{H}{L^2}\zeta_{xx}\left[\frac{U}{\hat{l}}q_\xi + \frac{H}{L}\zeta_x\frac{W}{\hat{l}}f_\xi\right]\right.$$

$$+\nu\left(\frac{V}{\hat{l}}k_\eta + \frac{H}{L}\zeta_y\frac{W}{\hat{l}}f_\eta\right) + \frac{H}{L^2}\zeta_{yy}\left[\frac{V}{\hat{l}}k_\eta\right.$$

$$\left.\left.+\frac{H}{L}\zeta_y\frac{W}{\hat{l}}f_\eta + \nu\left(\frac{U}{\hat{l}}q_\xi + \frac{H}{L}\zeta_x\frac{W}{\hat{l}}f_\xi\right)\right]\right\}$$

$$+(1-\nu)\frac{H}{L^2}\zeta_{xy}\left[\frac{U}{\hat{l}}q_\eta + \frac{V}{\hat{l}}k_\xi + \frac{H}{\hat{l}}\zeta_x\frac{W}{\hat{l}}f_\eta\right.$$

$$\left.+\frac{H}{L}\zeta_y\frac{W}{\hat{l}}f_\xi\right] = \rho h\omega^2\left[Wf_{\tau\tau} - \frac{H}{L}\zeta_x U q_{\tau\tau} - \frac{H}{L}\zeta_y V k_{\tau\tau}\right] \tag{3.58}$$

where (3.57) is obtained directly from (3.42) and (3.58) is obtained directly from (3.44) by the above substitutions. The resultant form of (3.43) is not reproduced since it contributes nothing additional to the argument. In (3.55), (3.57) and (3.58) the quantity H is associated with the shell rise illustrated in figure 5, p. 49.

In addition to the above equations we have the fact that the parameter $\hat{l}$ is related to ω as through the relation

$$\frac{1}{\hat{l}^2} = \frac{\omega^2}{\left(\frac{E}{\rho}\right)} = \frac{\rho\omega^2}{E} \tag{3.59}$$

This was specifically stated to be true in reference [34], p. 172, but evidently overlooked in the subsequent analysis. Retention of this relation enables one to interpret the results properly.

It will prove helpful to multiply (3.57) by $\hat{I}^2$ and then to group the U and W terms together, as done below. In (3.60) the $\frac{\rho\omega^2}{E}$ term was eliminated by the use of (3.59).

$$
\begin{aligned}
&-\left[U q_{\xi\xi} + \frac{1-\nu}{2} U q_{\eta\eta} + \frac{1+\nu}{2} V k_{\eta\xi} - U q_{\tau\tau}\right] \\
&= \frac{1-\nu}{2}\left[\frac{H}{L} W \zeta_x f_{\eta\eta} + \frac{H}{L}\frac{\hat{I}}{L} W f_\xi \zeta_{yy}\right] + \frac{H}{L} W \zeta_x f_{\xi\xi} \\
&+ \frac{H}{L}\frac{\hat{I}}{L} W f_\xi \zeta_{xx} + \frac{1+\nu}{2}\left[\frac{H}{L}\frac{\hat{I}}{L} W \zeta_{xy} f_\eta\right. \\
&\left. + \frac{H}{L} W \zeta_y f_{\eta\eta}\right] \qquad (3.60)
\end{aligned}
$$

Confronted with equation (3.60) Reissner argued that in order to have the longitudinal straining exert an influence on transverse vibrations it is essential that in (3.60) the terms involving both f and g remain significant. Thus there are two distinct possibilities:

(i) $\hat{I}/L \leq 1$

In this case the term $\frac{H}{L} W$ will be equal to or greater than any other term in the group on the right of (3.60), so that

$$U = \frac{H}{L} W \qquad (3.61)$$

(ii) $\hat{l}/L > 1$

In this case the term $\frac{H}{L}\frac{\hat{l}}{L}\overline{W}$ will dominate other terms of the form $\frac{H}{L}\overline{W}$ so that by the above argument it follows that

$$U = \frac{H}{L}\frac{\hat{l}}{L}W \tag{3.62}$$

It is assumed, of course, that $\frac{H}{L} << 1$, since this is necessary for shallow shell theory to apply.

With these results in mind, we not turn to equation (3.58) and multiply both sides by $\frac{\hat{l}^2}{Eh}$ and again appeal to (3.59) to obtain

$$\frac{1}{1-\nu^2}\left\{\frac{H}{L}\frac{\hat{l}}{L}\left[U\zeta_{xx}q_\xi + \nu V\zeta_{xx}k_\eta + V\zeta_{yy}k_\eta\right.\right.$$

$$\left.\left. + \nu U\zeta_{yy}q_\xi\right] + (1-\nu)\frac{H}{L}\frac{\hat{l}}{L}\zeta_{xy}\left[U q_\eta + V k_\xi\right]\right\}$$

$$+ \frac{H}{L}U\zeta_x q_{\tau\tau} + \frac{H}{L}V\zeta_y k_{\tau\tau} = W f_{\tau\tau}$$

$$+ \frac{1}{12(1-\nu^2)}\left(\frac{h}{\hat{l}}\right)^2 W\nabla^2 f - \frac{1}{1-\nu^2}\left\{\frac{H}{L}\frac{\hat{l}}{L}\left[\frac{H}{L}W\zeta_{xx}\zeta_x f_\xi\right.\right.$$

$$\left.\left. + \nu\frac{H}{L}W\zeta_{xx}\zeta_y f_\eta + \frac{H}{L}W\zeta_y\zeta_{yy}f_\eta + \nu\frac{H}{L}W\zeta_x\zeta_{yy}f_\xi\right.\right.$$

$$+ (1-\nu)\frac{H}{L}\frac{\hat{l}}{L}\frac{H}{L}\zeta_{xy}\zeta_x w f_\eta$$

$$+ (1-\nu)\frac{H}{L}\frac{\hat{l}}{L}\zeta_{xy}\frac{H}{L}\zeta_y w f_\xi . \qquad (3.63)$$

Substitution of the condition (3.61) into (3.63) and collection of the terms for easy comparison leads to the result that

$$\frac{1}{1-\nu^2}\left(\frac{H}{L}\right)^2\frac{\hat{l}}{L}[\zeta_{xx}q_\xi + \zeta_{yy}k_\eta + \nu(\zeta_{xx}k_\eta + \zeta_{yy}q_\xi)]w$$

$$+ (1-\nu)\left(\frac{H}{L}\right)^2\frac{\hat{l}}{L}\zeta_{xy}[q_\eta + k_\xi]w + \left(\frac{H}{L}\right)^2(\zeta_x q_\tau + \zeta_y k_\tau)w$$

$$= w f_\tau + \frac{1}{12(1-\nu^2)}\left(\frac{h}{l}\right)^2(\nabla^2 f)w$$

$$- \frac{1}{1-\nu^2}\left(\frac{H}{L}\right)^2\frac{\hat{l}}{L}[\zeta_{xx}\zeta_x f_\xi + \nu\zeta_{xx}\zeta_y f_\eta]w$$

$$- \frac{1}{1-\nu^2}\left(\frac{H}{L}\right)^2\frac{\hat{l}}{L}[\zeta_y\zeta_{yy}f_\eta + \nu\zeta_x\zeta_{yy}f_\xi]w$$

$$- \frac{1}{1+\nu}\left(\frac{H}{L}\right)^2\frac{\hat{l}}{L}[\zeta_{xy}\zeta_x f_\eta + \zeta_{xy}\zeta_y f_\xi]w \qquad (3.64)$$

In any consideration of (3.64) we must remember that $\frac{\hat{l}}{L} \leq 1$ for (3.61) to remain valid. Thus since $\frac{H}{L} << 1$ and $\frac{\hat{l}}{L} \leq 1$ it follows that:

$$\frac{1}{12(1-\nu^2)}\left(\frac{h}{\hat{l}}\right)^2 = O(1) \qquad (3.65)$$

or that it is of unit magnitude, in Reissner's terminology. Thus we must add the condition (3.65) to the condition (3.61) if we wish to maintain the importance of f_{TT}. Since h/L is negligibly small in accordance with the assumptions of shallow shell theory, examination of (3.65) for the case where $\hat{l}$ is allowed to lie near L in the range between h and L is to imply that f_{TT} is of the order of $(H/L)^2$. Therefore (3.61) must be modified to read

$$\frac{\hat{l}}{L} < 1 \qquad (3.66)$$

The result of substituting (3.62) into (3.63) may easily be seen by replacing W on the left by $\frac{\hat{l}}{L} W$. This yields no further restriction on the range of $\hat{l}$. Thus we have arrived at the conclusion that

$$\frac{\hat{l}}{L} > 1 \qquad \frac{\hat{l}}{L} < 1 \qquad \frac{\hat{l}}{L} \neq 1 \qquad (3.67)$$

for values of ν not near -1. Except for this restric-

tion, the inequalities (3.67) specify the ranges of wavelength for which the neglect of longitudinal inertia is valid. As has been pointed out by Reissner in [34], that the simplified equations (3.47) and (3.48) may not be applicable for cases where $\hat{l}/L \gg 1$ and may be further simplified in cases where $\frac{\hat{l}}{L} \ll 1$, so that the condition (3.67) is valid if the ratios are bounded away from values extremely large or extremely small in comparison with unity.

The applicability of the equations of motion subject to the restriction (3.67), and therefore written with longitudinal inertia effects neglected, is much larger than one might suspect. The extent of the range of validity is indicated in [39, 49] by P, M. Naghdi and R. M. Cooper for the case of a cylindrical shell.

20. Viscoelastic Shell Equations The discussion in Chapter III up to this point has been in terms of an elastic material. Reference to the correspondence principle shows that a completely parallel discussion for the viscoelastic material may be given. Therefore in the remainder of this section we shall duplicate the steps leading to the strain-resultant relations and the moment-curvature relations for viscoelastic shell theory to demonstrate that the applicability of the correspondence principle is in no way restricted by the derivation process. Using the form

$$\bar{\epsilon}_{ij} = \frac{1+\nu(s)}{E(s)}\,\bar{\sigma}_{ij} - \frac{\nu(s)}{E(s)}\,\bar{\Theta}\,\delta_{ij} \qquad (3.68)$$

and the assumptions of shell theory one has that

$$\bar{\epsilon}_{11} = \frac{1}{E(s)}\left[\bar{\sigma}_{11} - \nu(s)\,\bar{\sigma}_{22}\right], \qquad (3.69)$$

$$\bar{\epsilon}_{22} = \frac{1}{E(s)}\left[\bar{\sigma}_{22} - \nu(s)\,\bar{\sigma}_{11}\right], \qquad (3.70)$$

$$\bar{\epsilon}_{12} = \frac{1+\nu(s)}{E(s)}\,\bar{\sigma}_{12}, \qquad (3.71)$$

where the strains are defined by

$$\bar{\epsilon}_{11} = \bar{\epsilon}^{\,0}_{11} + \zeta\,\bar{\kappa}_{11}, \qquad \bar{\kappa}_{11} = -\frac{\partial^2 \bar{w}}{\partial x^2}, \qquad (3.72)$$

$$\bar{\epsilon}_{22} = \bar{\epsilon}^{\,0}_{22} + \zeta\,\bar{\kappa}_{22}, \qquad \bar{\kappa}_{22} = -\frac{\partial^2 w}{\partial y^2}, \qquad (3.73)$$

$$\bar{\epsilon}_{12} = \bar{\epsilon}^{\,0}_{12} + \zeta\,\bar{\kappa}_{12}, \qquad \bar{\kappa}_{12} = -\frac{\partial^2 w}{\partial x\,\partial y}, \qquad (3.74)$$

and where

$$\bar{\epsilon}^{\,0}_{22} = \frac{\partial \bar{v}}{\partial y} + \frac{\partial z}{\partial y}\,\frac{\partial \bar{w}}{\partial y}, \qquad (3.75)$$

$$\bar{\epsilon}^{\,0}_{11} = \frac{\partial \bar{u}}{\partial x} + \frac{\partial z}{\partial x}\,\frac{\partial \bar{w}}{\partial x}. \qquad (3.76)$$

$$2\,\bar{\epsilon}^{\circ}_{12} = \frac{\partial \bar{u}}{\partial y} + \frac{\partial \bar{v}}{\partial x} + \frac{\partial \bar{z}}{\partial x}\,\frac{\partial \bar{w}}{\partial y} + \frac{\partial \bar{z}}{\partial y}\,\frac{\partial \bar{w}}{\partial x} \,. \qquad (3.77)$$

In terms of a rectangular Cartesian coordinate system. In such a system the middle surface is given by

$$z = z(x, y)$$

and the displacements in the x, y and z directions are denoted by u, v and w respectively.

Application of the operator

$$\int_{-\frac{h}{2}}^{\frac{h}{2}} d\zeta \,.$$

in which h is the shell thickness to (3.69), (3.70), and (3.71) gives

$$\int_{-\frac{h}{2}}^{\frac{h}{2}} \bar{\epsilon}_{11}\, d\zeta = \frac{1}{E(s)}\left[\bar{N}_{11} - \nu(s)\,\bar{N}_{22}\right], \qquad (3.78)$$

$$\int_{-\frac{h}{2}}^{\frac{h}{2}} \bar{\epsilon}_{22}\, d\zeta = \frac{1}{E(s)}\left[\bar{N}_{22} - \nu(s)\,\bar{N}_{11}\right], \qquad (3.79)$$

$$\int_{-\frac{h}{2}}^{\frac{h}{2}} \bar{\epsilon}_{12}\, d\zeta = \frac{1+\nu(s)}{E(s)}\,\bar{N}_{12} \qquad (3.80)$$

Employing the definitions in (3.72), (3.73), and (3.74) one may evaluate the left hand side of (3.78), (3.79) and (3.80). For example, consider equation (3.72), for which

$$\int_{-\frac{h}{2}}^{\frac{h}{2}} \bar{\epsilon}_{11}\, d\zeta = \int_{-\frac{h}{2}}^{\frac{h}{2}} \bar{\epsilon}^{0}_{11}\, d\zeta + \int_{-\frac{h}{2}}^{\frac{h}{2}} \bar{\kappa}_{11}\, \zeta\, d\zeta$$

$$= \bar{\epsilon}^{0}_{11}\, h \qquad (3.81)$$

Similar results may be obtained from (3.73) and (3.74). Consequently (3.78), (3.79, and (3.80) are

$$\bar{\epsilon}^{0}_{11} = \frac{1}{h\,E(s)} \left[\bar{N}_{11} - \nu(s)\, \bar{N}_{22} \right] \qquad (3.82)$$

$$\bar{\epsilon}^{0}_{22} = \frac{1}{h\,E(s)} \left[\bar{N}_{22} - \nu(s)\, \bar{N}_{11} \right] \qquad (3.83)$$

$$\bar{\epsilon}^{0}_{12} = \frac{1 + \nu(s)}{E(s)}\, \bar{N}_{12} \qquad (3.84)$$

Application of the operator

$$\int_{-\frac{h}{2}}^{\frac{h}{2}} \zeta\, d\zeta$$

to the same set of equations, and using the same definitions, one finds that

$$\int_{-\frac{h}{2}}^{\frac{h}{2}} \bar{\epsilon}_{11}\, \zeta\, d\zeta = \frac{1}{E(s)} \left[\bar{M}_{11} - \nu(s)\, \bar{M}_{22} \right], \quad (3.85)$$

$$\int_{-\frac{h}{2}}^{\frac{h}{2}} \bar{\epsilon}_{22}\, \zeta\, d\zeta = \frac{1}{E(s)} \left[\bar{M}_{22} - \nu(s)\, \bar{M}_{11} \right], \quad (3.86)$$

$$\int_{-\frac{h}{2}}^{\frac{h}{2}} \bar{\epsilon}_{12}\, \zeta\, d\zeta = \frac{1+\nu(s)}{E(s)}\, \bar{M}_{12} . \quad (3.87)$$

And as before, the left hand side may be evaluated from the definitions

$$\int_{-\frac{h}{2}}^{\frac{h}{2}} \bar{\epsilon}_{11}\, \zeta\, d\zeta = \int_{-\frac{h}{2}}^{\frac{h}{2}} \bar{\epsilon}^{\circ}_{11}\, \zeta\, d\zeta + \int_{-\frac{h}{2}}^{\frac{h}{2}} \bar{\kappa}_{11}\, \zeta^2\, d\zeta$$

$$\doteq \bar{\kappa}\, \frac{h^3}{12} \quad (3.88)$$

Thus it follows that

$$\frac{E(s)\, h^3}{12}\, \bar{\kappa}_{11} = \bar{M}_{11} - \nu(s)\, \bar{M}_{22}, \quad (3.89)$$

$$\frac{E(s)\,h^3}{12}\,\bar{\kappa}_{22} = \bar{M}_{22} - \nu(s)\,\bar{M}_{11} \qquad (3.90)$$

and

$$\frac{E(s)\,h^3}{12}\,\bar{\kappa}_{12} = [1+\nu(s)]\,\bar{M}_{12}\,. \qquad (3.91)$$

Solving the above three equations for the moment resultants one easily finds that

$$\bar{M}_{11} = D(s)\,[\,\bar{\kappa}_{11} + \nu(s)\,\bar{\kappa}_{22}\,], \qquad (3.92)$$

$$\bar{M}_{22} = D(s)\,[\,\bar{\kappa}_{22} + \nu(s)\,\bar{\kappa}_{11}\,], \qquad (3.93)$$

and

$$\bar{M}_{12} = [1-\nu(s)]\,D(s)\,\bar{\kappa}_{12}\,, \qquad (3.94)$$

in which

$$D(s) = \frac{E(s)\,h^3}{12\,[1-\nu^2(s)]}\,, \qquad (3.95)$$

and

$$\bar{M}_{\alpha\beta} = \int_{-\frac{h}{2}}^{\frac{h}{2}} \bar{\sigma}_{\alpha\beta}\,\zeta\,d\zeta\,. \qquad (3.96)$$

$$\bar{N}_{\alpha\beta} = \int_{-\frac{h}{2}}^{\frac{h}{2}} \bar{\sigma}_{\alpha\beta}\,d\zeta\,.$$

Thus the strain resultant and curvature resultant equotions of the viscoelastic theory of shells may be obtained from the corresponding equations for the elastic theory merely by replacing the elastic moduli by the analogous operator functions as outlined in the section devoted to the correspondence principle.

21. Some Results for Axisymmetric Static and Dynamic Elastic Shallow Spherical Shells In reference [41] Reissner has solved equations (3.50) and (3.51) for the static case in terms of Kelvin functions and used an approximate form of the particular solution. In particular he was concerned with (1) a shell with no edge restraint carrying a point load at the apex; (2) a shell with no edge restraint carrying a load uniformly distributed over a small circular area with center at the apex; and (3) a shell with edge restraint carrying a point load at the apex. The first of these is of interest since the solution for that case is exact and may be used for comparison with the results obtained in the following chapters. It might be noted here that reference [35] contains a multitude of errors, some of which were corrected in reference [42]. Others have evidently remained uncorrected, such as the expressions for the constants in the solution for the shell with a negative load uniformly distributed over a small circular area with center at the apex. They may be correctly obtained from the basic equations given in the discussion, and the correct expres-

sions were evidently used in the computation of the graphs presented in the paper.

The expression for the displacement due to a concentrated load at

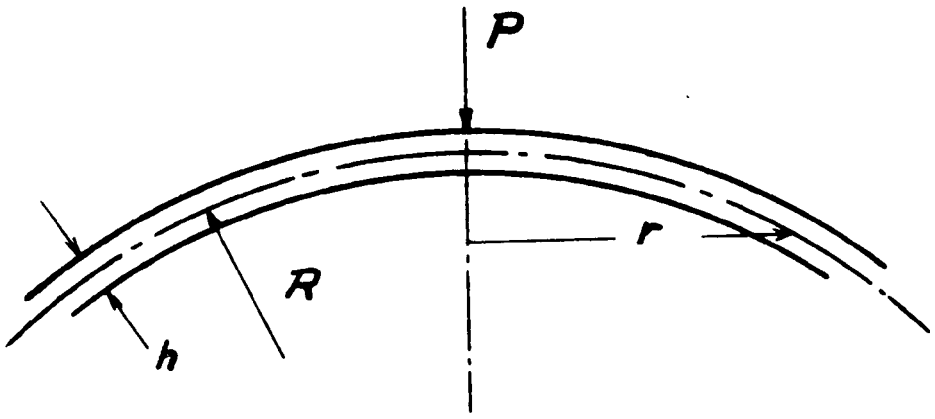

figure 6

the apex, and the corresponding Airy stress function, are, from [41]

$$w(r) = \frac{\sqrt{12(1-\nu^2)}}{2\pi} \frac{PR}{Eh^2} \cdot kei\,\frac{r}{l} \qquad (3.97)$$

$$F(r) = \frac{PR}{2\pi}\left(ker\,\frac{r}{l} + \ln\frac{r}{l}\right) \qquad (3.98)$$

in which
$$l = \frac{\sqrt{Rh}}{[12(1-\nu^2)]^{1/4}} \qquad (3.99)$$

The cases of forced and free oscillations of a shallow spherical shell have been considered by Reissner in [43] in which equations (3.50) and (3.51) were solved for the

steady-state motion; the displacement, stresses, and forcing function are assumed to all have the separable time dependence given by $e^{i\omega t}$

The system of two simultaneous differential equations (3.50) and (3.51) then have solutions of the form

$$w(r) = C_1 J_0(\lambda r) + C_2 Y_0(\lambda r) + C_3 I_0(\lambda r) + C_4 K_0(\lambda r) + C_5 \quad (3.100)$$

$$F(r) = -\frac{hE}{R\lambda^2}\left[C_1 J_0(\lambda r) + C_2 Y_0(\lambda r) - C_3 I_0(\lambda r) - C_4 K_0(\lambda r)\right] + \frac{1}{4}\rho h \omega^2 R C_5 r^2 + C_8 \ln\frac{r}{l}$$

where

$$\lambda^4 = \frac{\rho h}{D}\omega^2 - \frac{hE}{R^2 D} \quad (3.101)$$

after the condition

$$\frac{hE}{R} w = \nabla^2 F + \text{Const.} \quad (3.102)$$

for vanishing circumferential displacements has been utilized. The constants in (3.100) and (3.101) are then determined to satisfy the boundary conditions for the problems of (1) the

determination of the lowest frequency of free vibration for a shell segment with free edge, (2) the determination of the frequencies of free vibrations of a shell segment with free edge, and (3) the forced vibrations due to a point, or concentrated, load at the apex of the shell. It is the latter of these three problems that will be of interest here.

While the analysis of the latter problem is essentially correct for the frequency range given by the inequality (3.103)

$$\omega^2 > \frac{E}{\rho R^2} \tag{3.103}$$

the reduction to frequency range given by the inequality (3.104)

$$\omega^2 < \frac{E}{\rho R^2} \tag{3.104}$$

is by a definitely incorrect method. The latter seems to have been motivated by what Reissner considered a known relation

$$Y_0\left(i^{\frac{1}{2}}x\right) = \frac{2}{\pi}\left[-\ker x + i\,\mathrm{kei}\,x\right] \tag{3.105}$$

which is equation (43_a) of [37]. This relation is both unknown and wrong, as reference to either [38] or [45] will quickly show. The correct relation is specifically written

on p. 148 of [45] as

$$Y_0\left(i^{\frac{1}{2}}x\right) = 2\,\mathrm{bei}\,x - \frac{2}{\pi}\,\mathrm{ker}\,x + i\left[\mathrm{ber}\,x + \frac{2}{\pi}\,\mathrm{kei}\,x\right] \quad (3.106)$$

for real x .

A corrected analysis of the problem of an oscillating concentrated load acting at the apex of a shallow spherical shell may be obtained by postulating, as Reissner has done, that at the apex of the shell the following conditions must be satisfied

$$\lim_{r\to 0}\left(2\pi r V_r\right) = P e^{i\omega t}$$

$$w(0,t),\ N_{rr}(0,t),\ N_{\theta\theta}(0,t) \quad \text{finite} \quad (3.107)$$

in which

$$V_r = Q_{rr} + N_{rr}\frac{\partial z}{\partial r} + N_{r\theta}\frac{1}{r}\frac{\partial z}{\partial r} \quad (3.108)$$

$$N_{rr} = \frac{1}{r}\frac{\partial F}{\partial r} + \frac{1}{r^2}\frac{\partial^2 F}{\partial \theta^2} \quad (3.109)$$

and

$$z = z(r,\theta)$$

for shallow shells in general. For the present problem

there is no angular dependence.

Furthermore we must stipulate that the

$$\lim_{r \to 0} \left(r \frac{\partial}{\partial r} \nabla^2 w \right) = - \frac{P}{2\pi D},$$

and that (3.110)

$$\nabla^2 F(0,t) \quad \text{and} \quad \left[\frac{1}{r} \frac{\partial F}{\partial r} \right]_{r=0} \quad \text{are finite.}$$

In forming the solution from the elements given in (3.100) and (3.101) we must bear in mind that since the right-hand side of (3.50) was assumed to be complex when we postulated the complex time dependence, we must likewise assume that the displacement and the stresses are, in general, complex. Consequently we shall assume that the solution satisfying the concentrated load problem is of the form

$$w(r) = C_1 J_0(\lambda r) + C_2 Y_0(\lambda r) + C_4 K_0(\lambda r) \tag{3.111}$$

$$F(r) = - \frac{hE}{R\lambda^2} \left[C_1 J_0(\lambda r) + C_2 Y_0(\lambda r) - C_4 K_0(\lambda r) \right] + C_8 \ln \frac{r}{l} \tag{3.112}$$

where the constants may be complex. The method of solution, for the constants, is identical with that outlined in [37], with the additional requirement that the solution reduce to the steady state solution. This latter condition

may be used to solve for C_1 . Since the purpose here is not to reproduce the work of [37] but to record the result, we shall without further discussion display the corrected solution as

$$w(r) = \frac{P}{4\pi D\lambda^2}\left[K_0(\lambda r) + \frac{\pi}{2} Y_0(\lambda r) - i\frac{\pi}{2} J_0(\lambda r)\right] \tag{3.113}$$

$$F(r) = \frac{PEh}{4\pi RD\lambda^4}\left[K_0(\lambda r) - \frac{\pi}{2} Y_0(\lambda r) + i\frac{\pi}{2} J_0(\lambda r) + 2\ln\frac{r}{l}\right] \tag{3.114}$$

where (3.84) and (3.85) represent the complex displacement and complex stress-function. The physically observed quantities are the real parts of (3.113) and (3.114), namely

$$w(r) = \frac{P}{4\pi D\lambda^2}\left[K_0(\lambda r) + \frac{\pi}{2} Y_0(\lambda r)\right] \tag{3.115}$$

$$F(r) = \frac{PEh}{4\pi RD\lambda^4}\left[K_0(\lambda r) - \frac{\pi}{2} Y_0(\lambda r)\right.$$

$$+ 2 \ln \frac{r}{l} \Big] . \qquad (3.116)$$

These reduce to the static values when the Bessel functions are correctly expressed in terms of Kelvin functions. The necessary relations between Kelvin and Bessel functions may be found in [44].

22. Note on the Results of Section 19 In section 19 it was shown that the neglect of longitudinal inertia was not valid for $\frac{\hat{l}}{L} = 1$. In the case of oscillations of a shallow spherical shell, where the L of section 19 is taken to be the radius of the shell R , we may write

$$\lambda^4 = \frac{Eh}{R^2 D} \left[\rho \frac{\omega^2}{E} R^2 - 1 \right] \qquad (3.117)$$

Using (3.59) and the identification of L and R we may immediately write that

$$\lambda^4 = \frac{Eh}{L^2 D} \left[\frac{L^2}{\hat{l}^2} - 1 \right] \qquad (3.118)$$

If we next allow $\frac{\hat{l}}{L} = 1$

it is apparent that

$$\lambda = 0$$

A glance at (3.86) and (3.87) and the series representation of the Bessel functions shows that

$$\frac{\pi}{2} Y_0(\lambda r) + K_0(\lambda r) \rightarrow 0$$

for all finite r as $\lambda \rightarrow 0$, and that concurrently we have (γ is Euler's Constant, 0.577215...)

$$\frac{\pi}{2} Y_0(\lambda r) - K_0(\lambda r) \rightarrow 2\gamma + 2 \ln \frac{\lambda r}{2}$$

Thus it is evident that the effect of longitudinal inertia cannot be neglected.

CHAPTER IV

SHALLOW SPHERICAL SHELL UNDER A TIME DEPENDENT LOAD

1. Introduction In this section we shall be concerned with the response of a shallow spherical shell under an arbitrary axisymmetric load. In particular we shall investigate the solution of the governing equations for the cases of (1) an axisymmetricly located uniformly distributed load with a Dirac delta function time dependence, (2) a centrally located ring load with a delta function time dependence, and (3) a concentrated load at the apex of the shell, again with a delta function time dependence. With the results of case (2) which has a delta function space dependence and a delta function time dependence, one may, by integration over space and time, obtain the response for an arbitrary time dependent and arbitrary space dependent loading, subject only to the restriction of axisymmetry.

A solution to the problem may be attempted by the technique suggested by Lee [26] in which the space dependent part of the solution is obtained in the Laplace transform plane and then the complete solution found upon inverting the result by means of the inverse Laplace transform. The space dependent solution for the problem under consideration has indeed by obtained by Reissner [43] in terms of Bessel and Kelvin functions. The inversion of this result in the Laplace transform space is not possible in closed form however since the arguments of the Bessel and Kelvin functions

are polynomials of fourth degree in the Laplace transform variable. Application of the inversion integral results in a problem of such length that this approach, even with the aid of machine methods, is of little practicality.

In this analysis an alternative approach is presented. Rather than attempting to use an existing solution to the associated elastic problem, the problem is solved by means of the Hankel transform, which is applied to the space dependent part of the problem. The system of simultaneous differential equations is thus transformed into a system of algebraic equations which can be solved for the dependent variables in the Laplace-Hankel space. Since the solution in this space contains only polynomials in the Laplace and Hankel variables, it can be inverted to the real space with comparative ease.

2. Properties of the Hankel Transform We shall refer to $f^*(\xi, s)$ as the Hankel transform of $\bar{f}(r, s)$, where the two are related as

$$f^*(\xi, s) = \int_0^\infty r \bar{f}(r, s) J_0(r\xi)\, dr \qquad (4.1)$$

in which ξ is a real positive variable. In the literature the equation (4.1) is known as the Hankel transform or order zero.

The utility of the Hankel transform for the present work is due to its self-reciprocal property, as given in the

following theorem, and to transformation rule for the Laplacian operator. Both of these properties are established in Sneddon [46], Chapter II. The requirements which the object function must fulfill for the validity of the transform are set forth in the Hankel inversion theorem:

If the integral $\int_0^\infty f(r)\,dr$

is absolutely convergent, and if the function $f(r)$ is of bounded variation in the neighborhood of the point r then, for $\nu \geq \frac{1}{2}$

$$\int_0^\infty \xi J_\nu(r\xi)\,d\xi \int_0^\infty u f(u) J_\nu(u\xi)\,du = \frac{1}{2}[f(r+0) + f(r-0)]$$

Extension of this theorem from the case of $f(r)$ to that of $\bar{f}(r, s)$ requires only that the above properties be satisfied by $\bar{f}(r, s)$ for all s in the domain of definition.

If, in addition to the above conditions, the function is such that

$$\left.\begin{aligned} r f(r, s) &\to 0 \\ r \frac{\partial f}{\partial r}(r, s) &\to 0 \end{aligned}\right\} \quad \text{as} \quad r \to 0 \quad \text{and as} \quad r \to \infty$$

then we may establish the following transformation rule for

the quantity $$\nabla^2 \bar{f}(r, s)$$

in which $$\nabla^2 \equiv \frac{\partial^2}{\partial r^2} + \frac{1}{r}\frac{\partial}{\partial r}$$

Replacing the function $\bar{f}(r, s)$ by $\nabla^2 \bar{f}(r, s)$ in the equation (4.1) we have

$$\int_0^\infty (\nabla^2 \bar{f})\, r J_0(r\xi)\, dr = \int_0^\infty \frac{\partial \bar{f}}{\partial r}\frac{\partial}{\partial r}[r J_0(r\xi)]\, dr$$

$$= \left[\frac{\partial \bar{f}}{\partial r} r J_0(r\xi)\right]_0^\infty - \int_0^\infty \frac{\partial \bar{f}}{\partial r}\frac{\partial}{\partial r}[r J_0(r\xi)]\, dr$$

$$+ \int_0^\infty \frac{\partial \bar{f}}{\partial r} J_0(r\xi)\, dr \qquad (4.2)$$

upon integration of the first term by parts. Since, by assumption, $$r\frac{\partial \bar{f}}{\partial r} \to 0 \qquad r \to 0$$

we can write (4.2) as

$$\int_0^\infty (\nabla^2 \bar{f})\, r J_0(r\xi)\, d\xi$$

$$= -\xi \int_0^\infty r \frac{\partial \bar{f}}{\partial r}\left[\frac{\partial}{\partial(r\xi)} J_0(r\xi)\right] dr$$

$$= - \left[\bar{f}(r)\, r\xi \frac{\partial}{\partial(r\xi)} J_0(r\xi) \right]_0^\infty$$

$$+ \int_0^\infty \bar{f}(r) \frac{\partial}{\partial r} \left[r \frac{\partial}{\partial(r\xi)} J_0(r\xi) \right] d(\xi r) \qquad (4.3)$$

upon repeating the integration by parts. Reference to the Bessel differential equation shows that

$$\frac{\partial}{\partial r} \left[r \frac{\partial}{\partial(r\xi)} J_0(r\xi) \right] = - \xi^2 r J_0(r\xi),$$

so that the equation (4.3) may be written in the form

$$\int_0^\infty (\nabla^2 \bar{f})\, r J_0(r\xi)\, dr = - \xi^2 f^*(r, s) \qquad (4.4)$$

which establishes the transformation rule for the quantity $\nabla^2 \bar{f}(r, s)$. If we replace $\bar{f}(r, s)$ in (4.4) by $\nabla^2 \bar{f}(r, s)$ and require that

$$\left.\begin{aligned} & r \nabla^2 \bar{f}(r, s) \to 0 \\ & \text{and} \\ & r \frac{\partial}{\partial r} [\nabla^2 \bar{f}(r, s)] \to 0 \end{aligned}\right\} \qquad \begin{aligned} & r \to 0 \\ & \\ & r \to \infty \end{aligned}$$

we then find after iteration of the above result that

$$\int_0^\infty (\nabla^4 \bar{f})\, r J_0(r\xi)\, dr = \xi^4 f^*(r, s) \qquad (4.5)$$

3. Viscoelastic Infinite Shallow Spherical Shell Under Arbitrary Axisymmetric Loading In this section we shall obtain the solution to the system of partial differential equations for an infinite shallow spherical shell of linear viscoelastic material. From equations (3.50) and (3.51) for the elastic shallow spherical shell we may obtain the viscoelastic equations by appeal to the correspondence principle. Application of the Laplace and Hankel transforms to these equations results in the following algebraic system of equations in the Laplace-Hankel space:

$$D(s)\,\xi^4 w^* + \frac{1}{R} G^* = -\rho h w^* s^2 + p^* \tag{4.6}$$

$$G^* - \frac{hE(s)}{R} w^* = 0 \tag{4.7}$$

In the above, since the Airy stress function may not satisfy the conditions of the Hankel inversion theorem, we have used the substitution

$$\nabla^2 F(r,t) = G(r,t) \tag{4.8}$$

From (4.7) we may substitute for G^* in (4.6) to obtain

$$D(s)\,\xi^4 w^* + \frac{hE(s)}{R^2} w^* = -\rho h w^* s^2 + p^* \tag{4.9}$$

which in turn may be explicitly solved for w^* to give

$$w^* = \frac{p^*(\xi, s)}{D(s)\left[\xi^4 + \lambda_0^4(s)\right]} \tag{4.10}$$

in which

$$\lambda_o^4(s) = \frac{hE(s)}{R^2 D(s)} + \frac{\rho h s^2}{D(s)} . \qquad (4.11)$$

Returning to (4.6) and (4.7) we may now solve for $G^*(\xi, s)$ in the same manner as above, by eliminating W^* between (4.6) and (4.7) to obtain

$$\frac{R D(s)}{h E(s)} \xi^4 G^* + \frac{1}{R} G^* = -\rho h \frac{Rs}{hE(s)}^2 G^* + p^* , \qquad (4.12)$$

which we shall write in the explicit form

$$G^* = \frac{h}{R} \frac{p^*(\xi, s)}{\frac{D(s)}{E(s)}[\xi^4 + \lambda_o^4(s)]} . \qquad (4.13)$$

Application of the inverse Laplace transformation, denoted by

$$L^{-1}\{f(s); t\} \equiv \frac{1}{2\pi i} \lim_{\beta \to \infty} \int_{-\beta+\gamma i}^{\beta+\gamma i} e^{zt} f(z)\, dz , \qquad (4.14)$$

enables us to write the solution for the displacement and the quantity $G(r, t)$ in the real space, or the space containing the object functions. Thus we have

$$W(r, t) = \int_0^\infty \xi J_o(r\xi)\, d\xi \int_0^t L^{-1}\{p^*(\xi, s); t-\zeta\}$$

$$L^{-1}\left\{\frac{1}{D(s)[\xi^4 + \lambda_o^4(s)]}; \zeta\right\} d\zeta , \qquad (4.15)$$

and

$$G(r,t) = \frac{h}{R}\int_0^\infty \xi J_0(r\xi)\,d\xi \int_0^t L^{-1}\left\{ p^*(\xi,s); t-\zeta \right\}$$

$$L^{-1}\left\{ \frac{E(s)}{D(s)[\xi^4 + \lambda_0^4(s)]}; \zeta \right\} d\zeta \,, \qquad (4.15)$$

in which we have made use of the convolution theorem for the Laplace transformation. In obtaining these solutions we have made use of the following boundary and initial conditions:

$$\text{(i)} \quad \int_0^\infty \bar{w}(r,s)\,dr \qquad \text{and} \qquad \int_0^\infty \nabla^4 \bar{w}(r,s)\,dr,$$

$$\int_0^\infty \bar{G}(r,s)\,dr \qquad \text{and} \qquad \int_0^\infty \nabla^2 G(r,s)\,dr \qquad (4.17)$$

exist and are absolutely convergent for all positive values of s and r ;

(ii)

$$r\,\bar{w}(r,s) \longrightarrow 0\,, \quad r\frac{\partial \bar{w}}{\partial r}(r,s) \longrightarrow 0$$

$$r\nabla^2 \bar{w}(r,s) \longrightarrow 0 \text{ and } r\frac{\partial}{\partial r}[\nabla^2 \bar{w}(r,s)] \longrightarrow 0$$

$$\text{as } r \longrightarrow 0 \text{ and as } r \longrightarrow \infty \qquad (4.18)$$

and $$r\,\bar{G}(r,s) \longrightarrow 0\,, \qquad r\,\frac{\partial \bar{G}}{\partial r}(r,s) \longrightarrow 0$$

as $r \longrightarrow 0$ and as $r \longrightarrow \infty$, (4.19)

(iii)

$$w(r,0) = \frac{\partial w}{\partial t}(r,0) = 0$$

$$F(r,0) = 0 \,. \qquad (4.20)$$

The solution for the case of the general linear viscoelastic material will be complete when we have specified the function for the three types of loading mentioned at the outset. In the real space the uniformly distributed load over a circular area centered at the apex of the shell and applied for an infinitesimally short time duration at is given by

$$p(r,t) = p_0\, U(a-r)\, \delta(t-t_0) \qquad (4.21)$$

in which p_0 has the dimensions of momentum per unit area, and in which $U(a-r)$ represents the Heavyside unit function, defined by

$$U(x) = 0 \qquad x < 0$$

$$= \frac{1}{2} \qquad x = 0$$

$$= 1 \qquad x > 0 \qquad (4.22)$$

The symbol $\delta(t - t_0)$ denotes the Dirac delta function, or impulse function, and it is defined by the relations

$$\delta(t - t_0) = 0 \qquad t \neq t_0$$

$$\int_0^\infty \delta(t - t_0)\, dt = 1 \qquad (4.23)$$

For the case of $t_0 = 0$ in (4.23) the integral value becomes

$$\int_0^\infty \delta(t)\, dt = \frac{1}{2} \qquad (4.24)$$

The reasoning leading to this conclusion may be found in many texts, such as van der Pol and Bremmer [47].

With the aid of (4.22) and (4.23) one finds that the image function in the Hankel-Laplace space of the object function defined by (4.21) is

$$p^*(\xi, s) = \frac{p_0 a}{\xi} J_1(a\xi)\, e^{-s t_0} \qquad (4.25)$$

for a uniformly distributed pulse load. The uniformly distributed ring load centered at the apex is given by the expression

$$p = \frac{p_1}{2\pi a} \delta(r - a)\, \delta(t - t_0) \qquad (4.26)$$

in which p_1 has the dimension of momentum, and a is the radius of the circular ring concentric with origin.

The image of (4.26) is found to be

$$p^*(\xi, s) = \frac{p_1}{2\pi} e^{-s t_0} J_0(a\xi) \quad (4.27)$$

Use of the property (4.24) of the Dirac delta function leads to the following representation of the concentrated load at the apex of the shell.

$$p = \frac{p_1}{\pi r} \delta(r) \delta(t - t_0) \quad (4.28)$$

The image of (4.28) is

$$p^*(\xi, s) = \frac{p_1}{2\pi} e^{-s t_0} \quad (4.29)$$

for the concentrated pulse load at the apex of the shell. The dimensions of p_1 are seen to be the same as in (4.26).

Thus the displacement $W(r, t)$ and the function $G(r, t)$ are completely determined in the real or object space. The relation of the function $G(r, t)$ to the stresses may be ascertained by turning to (4.8) and the defining relation for the Airy stress function, namely that

$$N_{rr}(r, t) = \frac{1}{r} \frac{\partial F}{\partial r}(r, t)$$

$$N_{\theta\theta} = \frac{\partial^2 F}{\partial r^2}(r, t) \quad (4.30)$$

From (4.8) we have that

$$G = \nabla^2 F = \frac{1}{r}\frac{\partial F}{\partial r} + \frac{\partial^2 F}{\partial r^2} \quad (4.31)$$

which is to say that

$$G = N_{rr} + N_{\theta\theta} \quad (4.32)$$

We next observe that

$$\frac{\partial N_{rr}}{\partial r} = -\frac{1}{r^2}\frac{\partial F}{\partial r} + \frac{1}{r}\frac{\partial^2 F}{\partial r^2}$$

$$= \frac{1}{r}\left[N_{\theta\theta} - N_{rr}\right] \quad (4.33)$$

so that by the elimination of $N_{\theta\theta}$ between (4.32) and (4.33) we arrive at the following differential equation for N_{rr},

$$\frac{\partial N_{rr}}{\partial r} + 2N_{rr} = \frac{G}{r} \quad (4.34)$$

subject to the initial (in space) conditions that

$$N_{rr}(0, t) = N_{\theta\theta}(0, t) \quad (4.35)$$

Thus we are able to solve (4.34) numerically if necessary. If $G(r, t)$ is Perron integrable we may, of course, use the well-known integral solution of (4.34), which is

$$N_{rr}(r, t) = \frac{1}{r^2}\int r\, G(r, t)\, dr + \frac{C_1(t)}{r^2} \quad (4.36)$$

From (4.32) and the condition (4.35) it is apparent that the time dependent function $C_1(t)$ is given by

$$0 = \left[\int r\, G(r,t)\, dr \right]_{r=0} + C_1(t)$$

4. The Elastic Solution as A Special Case Consistancy between the elasticity and the viscoelasticity theories demands that the operator functions, which replace the elastic moduli upon application of the correspondence principle, approach their related elastic moduli as the relaxation time, or the retardation time, approaches its limiting elastic value. Moreover this implies that the viscoelastic solution should approach the corresponding elastic solution as the viscoelastic parameter approaches its elastic value.

From (4.10), (4.11) and (4.13) we have that in the elastic case

$$w^*(\xi, s) = \frac{p^*(\xi, s)}{D\left[\xi^4 + \lambda_0^4(s)\right]}, \qquad (4.37)$$

$$G^*(\xi, s) = \frac{Eh}{RD} \frac{p^*(\xi, s)}{\xi^4 + \lambda_0^4(s)} = \frac{Eh}{R} w^*(\xi, s), \qquad (4.38)$$

$$\lambda_0^4(s) = \frac{hE}{R^2 D} + \rho \frac{h}{D} s^2 \qquad (4.39)$$

For the concentrated pulse load at the apex of the shell the $p^*(\xi, s)$ may be obtained from (4.29). From the Laplace transform rules found in Churchill [47] it is evident that the convolution theorem is not necessary in this case, so that from [48], item (5.2.4), we have that

$$L^{-1}\left\{ \frac{e^{-s t_0}}{\xi^4 + \frac{\rho h}{D}\left[s^2 + \frac{E}{\rho R^2} \right]} \; ; t \right\}$$

$$= L^{-1}\left\{ \frac{D}{\rho h} \; \frac{e^{-s t_0}}{s^2 + \left[\frac{E}{\rho R^2} + \xi^4 \frac{D}{\rho h} \right]} \; ; t \right\}$$

$$= \frac{D}{\rho h}\left[\frac{E}{\rho R^2} + \frac{D}{\rho h}\xi^4 \right]^{-\frac{1}{2}} \sin\left\{ \left[\frac{E}{\rho R^2} + \frac{D}{\rho h}\xi^4 \right]^{\frac{1}{2}} (t - t_0) \right\} \tag{4.40}$$

Thus it is evident that we may write that the displacement in the object space is

$$w(r, t) = \frac{p_1 R}{2\pi \rho h}\sqrt{\frac{\rho}{E}} \int_0^\infty \xi \, J_0(r\xi) \, \frac{\sin\left\{ \sqrt{\frac{E}{\rho}} \frac{1}{R}\left[1 + (l\xi)^4 \right]^{\frac{1}{2}} (t - t_0) \right\}}{\left[1 + (l\xi)^4 \right]^{1/2}} \tag{4.41}$$

where $$l = \frac{\sqrt{Rh}}{[12(1-\nu^2)]^{1/4}},$$

and that $G(r,t)$ is given by

$$G(r,t) = \frac{p_0}{2\pi}\sqrt{\frac{E}{\rho}}\int_0^\infty \xi J_0(r\xi) \frac{\sin\left\{\sqrt{\frac{E}{\rho}}\frac{1}{R}[1+(l\xi)^4]^{\frac{1}{2}}(t-t_0)\right\}}{[1+(l\xi)^4]^{\frac{1}{2}}} d\xi \quad (4.42)$$

For the uniformly distributed pulse load over a circular area of radius a centered at the apex, the displacement is given by

$$W(r,t) = \frac{p_1 Ra}{\rho h}\sqrt{\left(\frac{E}{\rho}\right)^{-1}}\int_0^\infty J_0(r\xi) J_1(a\xi) \frac{\sin\left\{\sqrt{\frac{E}{\rho}}\frac{1}{R}[1+(l\xi)^4]^{\frac{1}{2}}(t-t_0)\right\}}{[1+(l\xi)^4]^{\frac{1}{2}}} d\xi \quad (4.43)$$

and the $G(r,t)$ may be found from (4.38). Forms (4.41) and (4.43) evidently cannot be integrated in closed form, based on the existing information. The numerical integration, however, is straightforward.

5. Comparison With Known Results The integration can be carried out in the case of a concentrated harmonic load applied at the apex if we are concerned with the so-called steady state displacement and stress amplitudes. This type of steady state will be discussed more fully in section 4 of Chapter V, so that it will suffice here to merely remark that it may be formally obtained from (4.37), (4.38), (4.39) and the loading function

$$\frac{p_2}{2\pi} \quad \frac{1}{s - i\omega} \tag{4.44}$$

in the Hankel-Laplace space by replacing s by $i\omega$ in all but the loading function. In the loading function expression the term $(s - i\omega)$ is replaced by unity. Before moving on it might be well to note that the dimensions of p_2 are those of a force because the time dependence is no longer impulsive but harmonic.

In the steady state condition the equations (4.37), (4.38) and (4.39) are replaced by the following three equations respectively:

$$w^*(\xi, i\omega) = \frac{p_2}{2\pi D} \frac{1}{\xi^4 + \lambda_o^4(i\omega)}, \tag{4.45}$$

$$G_o^*(\xi, i\omega) = \frac{p_2 E h}{2\pi R D} \frac{1}{\xi^4 + \lambda_o^4(i\omega)}, \tag{4.46}$$

$$\lambda_o^4(i\omega) = \frac{Eh}{R^2 D} - \frac{\rho h}{D}\omega^2 . \tag{4.47}$$

Since the above replacement is equivalent to taking the inverse Laplace transform, it only remains to take the inverse Hankel transform. The result is that

$$w(r, i\omega) = \frac{p_2}{2\pi D} \int_0^\infty \frac{\xi J_0(r\xi)\, d\xi}{\xi^4 + \lambda_*^4 (i\omega)}, \quad (4.48)$$

with a similar expression for $G(r, i\omega)$. According to item (8.2.8) of the table of Hankel transforms in [49] we find that the displacement is given by

$$w(r, i\omega) = -\frac{p_2}{2\pi D \lambda_0^2} \, kei(\lambda_0 r) \quad (4.49)$$

and the function $G(r, i\omega)$ is accordingly

$$G(r, i\omega) = -\frac{E h p_2}{2\pi R D \lambda_0^2} \, kei(\lambda_0 r) \quad (4.50)$$

Turning to Reissner [41, 43] and replacing p_2 by $-p_2$ in conformity with his sign convention we find that (4.49) agrees with the results given in [41] for the static load when we set $\omega = 0$ in (4.49). For further comparison we may obtain the stresses from (4.50), (4.32) and (4.36).

From (4.36) and (4.50) we have that

$$N_{rr} = \frac{E h p_2}{2\pi R D \lambda_0^2} \frac{1}{r^2} \int r \, kei(\lambda_0 r)\, dr + \frac{C_1}{r^2}$$

$$= \frac{E h p_2}{2\pi R D \lambda_0^4} \frac{1}{r^2} \int (r\lambda_0) \, kei(\lambda_0 r) \, d(\lambda_0 r)$$

$$+ \frac{C_1}{r^2}. \qquad (4.51)$$

Consulting reference [44] we find that the Kelvin functions have the property that

$$\frac{\partial}{\partial(\lambda_0 r)} \left[\lambda_0 r \frac{\partial}{\partial(\lambda_0 r)} ker(\lambda_0 r) \right] = -\lambda_0 r \, kei(\lambda_0 r) \qquad (4.52)$$

Thus the Perron integral in (4.51) may be evaluated immediately to give

$$N_{rr} = -\frac{E h p_2}{2\pi R D \lambda_0^4} \frac{1}{r^2} \left[\lambda_0 r \frac{\partial}{\partial(\lambda_0 r)} ker(\lambda_0 r) \right]$$

$$+ \frac{C_1}{r^2}. \qquad (4.53)$$

From the definition of the Kelvin function we find that

$$ker'(\lambda_0 r) = -\frac{1}{r} + \frac{\pi \lambda_0^2 r}{8} + \cdots \qquad (4.53)$$

so that from the initial conditions (4.35) we are able to evaluate the constant C_1 ,

$$0 = \frac{E h p_2}{2\pi R D \lambda_0^4} + C_1 . \qquad (4.55)$$

Substitution of (4.55) into (4.53) gives the final form of N_{rr} , namely

$$N_{rr} = - \frac{E h p_2}{2\pi R D \lambda_0^4} \left[\frac{1}{r^2} + \frac{1}{r} ker'(\lambda_0 r) + \lambda_0^2 kei(\lambda_0 r) \right] \qquad (4.56)$$

With the aid of equation (4.32) we also find that

$$N_{\theta\theta} = \frac{E h p_2}{2\pi R D \lambda_0^4} \left[\frac{1}{r^2} + \frac{1}{r} ker'(\lambda_0 r) + \lambda_0^2 kei(\lambda_0 r) \right] . \qquad (4.57)$$

which, with the aid of (4.52), may also be written in the form shown in (4.58).

$$N_{\theta\theta} = - \frac{E h p_2}{2\pi R D \lambda_0^4} \left[ker''(\lambda_0 r) - \frac{1}{r^2} \right] \qquad (4.58)$$

From (4.56) and (4.58) we may, if we wish, determine the Airy stress function, although in this analysis it is unnecessary at this stage, except for direct comparison with the results of Reissner. For comparison only, then, the Airy stress function corresponding to (4.56) and (4.57) or (4.58) is

$$F(r, i\omega) = - \frac{E h p_2}{2\pi R D \lambda_0^4} \left[ker(\lambda_0 r) + \ln \frac{r}{l} \right] \qquad (4.59)$$

which agrees with the results obtained by Reissner for the frequency range defined by the inequality

$$\frac{E}{\rho R^2} > \omega^2. \tag{4.60}$$

In the frequency range defined by the inequality

$$\frac{E}{\rho R^2} < \omega^2 \tag{4.61}$$

the above representation is still valid except that the argument of the Kelvin functions is now complex. We may, if we so desire, write (4.49) and (4.59) in terms of Bessel functions with real argument using the relations found in Magnus and Oberhettinger [44] connecting the two. These relations are

$$\ker(z) = \frac{\pi}{4}\left[-i J_0\left(e^{-i\frac{\pi}{4}}z\right) - Y_0\left(e^{-i\frac{\pi}{4}}z\right) + i J_0\left(e^{i\frac{\pi}{4}}z\right) - Y_0\left(e^{i\frac{\pi}{4}}z\right)\right] \tag{4.62}$$

and

$$\mathrm{kei}(z) = \frac{\pi}{4}\left[-J_0\left(e^{-i\frac{\pi}{4}}z\right) + i Y_0\left(e^{-i\frac{\pi}{4}}z\right) - J_0\left(e^{i\frac{\pi}{4}}z\right) - i Y_0\left(e^{i\frac{\pi}{4}}z\right)\right] \tag{4.63}$$

Following the choice of Reissner, we shall introduce a quantity

$$\lambda_0(i\omega) = e^{-i\frac{\pi}{4}} \lambda(i\omega)$$

$$= e^{-i\frac{\pi}{4}} \left[\rho \frac{h\omega^2}{D} - \frac{hE}{R^2 D} \right]. \quad (4.64)$$

In terms of the quantity $\lambda(i\omega)$ we then have that

$$\text{Kei}\left(e^{-i\frac{\pi}{4}} \lambda r\right)$$

$$= \frac{\pi}{4}\left[-i\frac{2}{\pi} K_0(\lambda r) - J_0(\lambda r)\right.$$

$$\left. - i Y_0(\lambda r)\right], \quad (4.65)$$

and that

$$\text{Ker}\left(e^{-i\frac{\pi}{4}} \lambda r\right) = i\frac{\pi}{4}\left[-i\frac{2}{\pi} K_0(\lambda r)\right.$$

$$\left. + J_0(\lambda r) + i Y_0(\lambda r)\right], \quad (4.66)$$

in which $Y_0(\lambda r)$ is the notation of Watson [50] for the Bessel function of the second kind, and $K_0(\lambda r)$ denotes the modified Hankel function. Substitution of (4.65) and (4.66) into (4.49) and (4.59) shows that

$$w(r;i\omega) = \frac{p_2}{4\pi D\lambda^2}\left[K_0(\lambda r) + \frac{\pi}{2} Y_0(\lambda r) - i\frac{\pi}{2} J_0(\lambda r)\right], \quad (4.67)$$

and

$$F(r;i\omega) = \frac{p_2}{4\pi RD\lambda^4}\left[K_0(\lambda r) - \frac{\pi}{2} Y_0(\lambda r) + 2\ln\frac{r}{l} + i\frac{\pi}{2} J_0(\lambda r)\right]. \quad (4.68)$$

The real parts of (4.67) and (4.68) agree with the results of Reissner, or more precisely with the real part of Reissner's solution. In [43] Reissner presented only the real part of the solution to the dynamic elastic problem of the oscillation of a shallow spherical shell due to an oscillatory concentrated load at the apex, apparently under the impression that the complex part was of no importance. He then presented as a known relation the equation

$$Y_0(i^{\frac{1}{2}}\lambda_0 r) = \frac{2}{\pi}\left[-\ker(\lambda_0 r) - i\,\mathrm{kei}(\lambda_0 r)\right] \quad (4.69)$$

and used it as a means of reducing the real parts of (4.67) and (4.68) to the expressions (4.49) and (4.59). Comparison of (4.69) with the relations found in Magnus and Oberhettinger [44], Watson [50], or McLachlan [45], clearly shows that (4.69) is neither known nor correct. In the instance of a real argument for the Kelvin functions McLachlan [45] has explicitly written the correct expression on p. 148, which is

$$Y_0(i^{\frac{1}{2}}x) = \mathrm{bei}\, x - \frac{2}{\pi}\,\mathrm{ker}\, x + i\left[\mathrm{ber}\, x + \frac{2}{\pi}\,\mathrm{kei}\, x\right] \tag{4.70}$$

(where x is a real variable)

It is thus indicated that the equations (4.67) and (4.68) represent the corrected results to the problem presented by Reissner in the section dealing with the concentrated load of reference [43].

6. The Viscoelastic Solution, Maxwell Material For the compressible Maxwell material the quantity $\lambda_0(s)$ contains a fourth degree polynomial in s which must be solved to obtain the Laplace inversion. Since this complication makes an analytical representation of the results clumsy to say the least, we shall consider the case of an incompressible Maxwell material, for which

$$E(s) = \frac{3}{2}\frac{P_2(s)}{P_1(s)} = \frac{3}{2}\frac{2\mu s}{s+\frac{1}{\tau}}$$

$$= E\frac{s}{s+\frac{1}{\tau}}, \qquad (4.71)$$

$$D(s) = \frac{h^3}{6}\frac{P_2(s)}{P_1(s)} = \frac{h^3}{9}E(s)$$

$$= \frac{Eh^3}{9}\frac{s}{s+\frac{1}{\tau}}, \qquad (4.72)$$

so that

$$\lambda_o^4(s) = \frac{hE(s)}{R^2D(s)} + \frac{\rho h}{D(s)}s^2$$

$$= \frac{h}{R^2}\frac{9}{h^3} + \rho h\frac{9}{Eh^3}s\left(s+\frac{1}{\tau}\right)$$

$$= \frac{9\rho}{Eh^2}\left[s^2 + \frac{s}{\tau} + \frac{E}{R^2\rho}\right]. \qquad (4.73)$$

Recalling equations (4.10) we have that

$$w^*(\xi,s) = \frac{9}{Eh^3}\frac{s+\frac{1}{\tau}}{s}\frac{p^*(\xi,s)}{\xi^4 + \frac{9\rho}{Eh^2}\left[s^2+\frac{s}{\tau}+\frac{E}{\rho R^2}\right]}$$

$$= \frac{1}{\rho h} \frac{s + \frac{1}{\tau}}{s} \frac{p^*(\xi, s)}{s^2 + \frac{s}{\tau} + \frac{E}{\rho R^2}\left[1 + (l\xi)^4\right]}$$

$$= \frac{1}{\rho h} p^*(\xi, s) \frac{s + \frac{1}{\tau}}{s\left[\left(s + \frac{1}{2\tau}\right)^2 + \left(\beta^2 - \frac{1}{4\tau^2}\right)\right]}, \tag{4.74}$$

in which we have defined

$$\beta = \left\{ \frac{E}{\rho R^2}\left[1 + (l\xi)^4\right] \right\}^{\frac{1}{2}}$$

$$= \frac{1}{\tau}\left\{ \frac{E}{\rho}\frac{\tau^2}{R^2}\left[1 + (l\xi)^4\right] \right\}^{\frac{1}{2}}. \tag{4.75}$$

From item (5.2.9) of [48] we find that

$$L^{-1}\left\{ \frac{\left(s + \frac{1}{\tau}\right) e^{-st_o}}{s\left[\left(s + \frac{1}{2\tau}\right)^2 + \left(\beta^2 - \frac{1}{4\tau^2}\right)\right]} ; t \right\} = \frac{1}{\tau\beta^2}$$

$$- \frac{e^{-\frac{t - t_o}{2\tau}}}{\beta^2}\left\{ \frac{1}{\tau} \cos\left[\sqrt{\beta^2 - \frac{1}{4\tau^2}}\,(t - t_o)\right] \right.$$

$$- \frac{\beta^2 - \frac{1}{2\tau^2}}{\sqrt{\beta^2 - \frac{1}{4\tau^2}}} \sin\left[\sqrt{\beta^2 - \frac{1}{4\tau^2}}\,(t - t_0)\right]\Bigg\} \quad (4.76)$$

Substitution of (4.76) into (4.74) and introduction of the relation

$$p^*(\xi, s) = p_3^*(\xi)\, e^{-st_0} \quad (4.77)$$

we are able to write the displacement in the object, or real, space as

$$w(r,t) = \frac{1}{\rho h} \int_0^\infty \xi\, p_3(\xi)\, J_0(r\xi)$$

$$\frac{1}{\tau\beta^2}\left\{1 - e^{-\frac{t-t_0}{2\tau}}\left\langle \cos\left[\sqrt{\beta^2 - \frac{1}{4\tau^2}}\,(t-t_0)\right]\right.\right.$$

$$\left.\left. - \frac{\tau\beta^2 - \frac{1}{2\tau}}{\sqrt{\beta^2 - \frac{1}{4\tau^2}}} \sin\left[\sqrt{\beta^2 - \frac{1}{4\tau^2}}\,(t - t_0)\right]\right)\right\} d\xi. \quad (4.78)$$

If we now recall equation (4.13) and use (4.71), (4.72) and (4.73) we find that[4]

$$G^*(\xi, s) = \frac{9}{Rh^2} \frac{p^*(\xi, s)}{\xi^4 + \frac{9\rho}{Eh^2}\left[s^2 + \frac{s}{\tau} + \frac{E}{\rho R^2}\right]}$$

---

[4] Here $\nu = \frac{1}{2}$ so $l^4 = \frac{R^2h^2}{9}$

$$= \frac{E}{\rho R} \cdot \frac{p_3^*(\xi)\, e^{-s t_0}}{\left[\left(s + \frac{1}{2\tau} \right)^2 + \left(\beta^2 - \frac{1}{4\tau^2} \right) \right]} \qquad (4.79)$$

From item (5.2.4) of reference [48] we find that

$$L^{-1} \left\{ \frac{e^{-s t_0}}{\left(s + \frac{1}{2\tau} \right)^2 + \left(\beta^2 - \frac{1}{4\tau^2} \right)} \; ; t \right\}$$

$$= \frac{e^{-\frac{t - t_0}{2\tau}}}{\sqrt{\beta^2 - \frac{1}{4\tau^2}}} \sin \left[\sqrt{\beta^2 - \frac{1}{4\tau^2}} \, (t - t_0) \right] . \qquad (4.80)$$

This result together with (4.79) enables us to write that

$$G(r, t) = \frac{E}{\rho R} \int_0^\infty \xi \, p_3^*(\xi) \, J_0(r\xi)$$

$$\frac{e^{-\frac{t - t_0}{2\tau}}}{\sqrt{\beta^2 - \frac{1}{4\tau^2}}} \sin \left[\sqrt{\beta^2 - \frac{1}{4\tau^2}} \, (t - t_0) \right] d\xi \, , \qquad (4.81)$$

from which the N_{rr} and the $N_{\theta\theta}$ may be computed according to equation (4.36) if $G(r, t)$ is Perron integrable. Otherwise they may be obtained from (4.34) and (4.35).

7. The Viscoelastic Solution, Kelvin Material The compressible Kelvin material presents similar difficulties

as the compressible Maxwell, and therefore we shall again consider the incompressible material. From the defining equations we shall, as before, determine the form of the terms E(s) and D(s) and then substitute into the form of the general solution for $w^*(\xi, s)$ and $G^*(\xi, s)$ in the Laplace-Hankel space.

$$E(s) = \frac{3}{2}\frac{P_2(s)}{P_1(s)} = E(\tau s + 1), \tag{4.82}$$

$$D(s) = \frac{h^3 E}{9}(\tau s + 1) \tag{4.83}$$

$$\lambda_o^4(s) = \frac{9}{R^2 h^2} + \frac{9\rho}{h^2 E}\frac{s^2}{\tau s + 1}$$

$$= \frac{9\rho}{h^2 E}\frac{s^2 + \frac{E}{\rho R^2}(\tau s + 1)}{\tau s + 1}. \tag{4.84}$$

From equation (4.10) we have that

$$w^*(\xi, s) = \frac{9}{E h^3}\frac{1}{\tau s + 1}\frac{p_3^*(\xi)\, e^{-s t_o}}{\xi^4 + \frac{9\rho}{h^2 E}\frac{s^2 + (E/\rho R^2)(\tau s + 1)}{\tau s + 1}}$$

$$= \frac{1}{\rho h}\frac{p_3^*(\xi)\, e^{-s t_o}}{s^2 + \frac{E}{\rho R^2}(\tau s + 1) + \frac{h^2 E}{9\rho}\xi^4(\tau s + 1)}$$

$$= \frac{1}{\rho h} \frac{p_3^*(\xi)\, e^{-st_o}}{s^2 + \beta^2 \tau s + \beta^2} \cdot \quad (4.85)$$

Thus it follows that

$$L^{-1}\left\{ w^*(\xi, s); t \right\} = \frac{p_3^*(\xi)}{\rho h} \left\{ \frac{e^{-\frac{\tau\beta^2}{2}(t-t_o)}}{\beta\sqrt{1-\left(\frac{\tau\beta}{2}\right)^2}} \right.$$

$$\left. \sin\left[\beta\sqrt{1-\left(\frac{\tau\beta}{2}\right)^2}\,(t-t_o)\right] \right\} \quad (4.86)$$

according to item (5.2.4)of reference [48]. Consequently we have that

$$w(r, t) = \frac{1}{\rho h} \int_0^\infty \xi\, p_3^*(\xi)\, J_o(r\xi)$$

$$e^{-\frac{\tau\beta^2}{2}(t-t_o)} \frac{\sin\left[\beta\sqrt{1-\left(\frac{\tau\beta}{2}\right)^2}\,(t-t_o)\right]}{\beta\sqrt{1-\left(\frac{\tau\beta}{2}\right)^2}}\, d\xi. \quad (4.87)$$

Next recalling equation (4.13) and inserting the values from (4.82), (4.83) and (4.84) we find that in the Laplace-Hankel space

$$G^*(\xi, s) = \frac{9}{Rh^2} \frac{p_3^*(\xi) e^{-st_0}}{\xi^4 + \frac{9\rho}{h^2 E} \frac{s^2 + \frac{E}{\rho R^2}(\tau s + 1)}{\tau s + 1}} \tag{4.88}$$

$$= \frac{E}{\rho R} \frac{p_3^*(\xi)(\tau s + 1) e^{-st_0}}{\left(s + \frac{\tau\beta^2}{2}\right)^2 + \beta^2 \left[1 - \left(\frac{\tau\beta}{2}\right)^2\right]}.$$

Returning to item (5.2.4) of reference [48] once more, we find

$$L^{-1}\{G^*(\xi, s); t\} = \frac{E}{\rho R} p_2^*(\xi) e^{-\frac{\tau\beta^2}{2}(t - t_0)}$$

$$\left\{\tau \cos\left[\beta\sqrt{1 - \left(\frac{\tau\beta}{2}\right)^2}\,(t - t_0)\right]\right.$$

$$\left. + \frac{1 - \frac{(\tau\beta)^2}{2}}{\beta\sqrt{1 - \left(\frac{\tau\beta}{2}\right)^2}} \sin\left[\beta\sqrt{1 - \left(\frac{\tau\beta}{2}\right)^2}\,(t - t_0)\right]\right\} \tag{4.89}$$

Application of the inverse Hankel transformation subsequently yields

$$G(r, t) = \frac{E\tau}{\rho R} \int_0^\infty \xi\, p_3^*(\xi)\, J_0(r\xi)$$

$$e^{-\frac{\tau\beta}{2}^2 (t-t_0)} \left\{ \cos\left[\beta\sqrt{1-\left(\frac{\tau\beta}{2}\right)^2}\,(t-t_0)\right] \right.$$

$$\left. + \frac{1-\frac{(\tau\beta)^2}{2}}{\tau\beta\sqrt{1-\left(\frac{\tau\beta}{2}\right)^2}} \sin\left[\beta\sqrt{1-\left(\frac{\tau\beta}{2}\right)^2}\,(t-t_0)\right] \right\} d\xi, \tag{4.90}$$

from which the stress resultants may be computed as before.

8. Presentation of Results The integrals in the expressions (4.78) and (4.81), associated with the Maxwell material, for the displacement and the quantity G(r,t) converge rapidly, so that numerical evaluation is feaseable. The same is true of the integrals in (4.87) and (4.90) for the case of a Kelvin material.

To demonstrate the nature of the displacement we have considered the case of a uniformly distributed load over a centrally located circular region of radius $\frac{a}{l} = 0.257$ The material is characterised by

$$\frac{\sqrt{\frac{E}{\rho}}}{\frac{R}{\tau}} = 2 \times 10^4$$

for both materials, Maxwell and Kelvin, and the time of observations is taken as $\frac{t}{\tau} = 12.05 \times 10^{-6}$

in dimensionless units, in order to observe the displacements near the origin.

The displacement for a Maxwell material and for an elastic material is given in figure 7. Although the two curves are not identical they appear to be identical because the difference is in the fourth place in this region of the shell.

The displacement for the Kelvin material is shown in figure 8, under identical conditions as for the Maxwell material.

For comparison we have shown the displacement of a flat elastic infinite plate of corresponding thickness and under an identical loading in figure 9, and for the corresponding time. The dimensionless time

$$\frac{t}{h}\sqrt{\frac{E}{\rho}} = 7.23$$

in terms of elastic plate parameters, is equivalent to the dimensionless time

$$\frac{t}{\tau} = 12.05 \times 10^{-6}$$

for the viscoelastic shells we have considered. The plate displacement at an earlier time,

$$\frac{t}{h}\sqrt{\frac{E}{\rho}} = 2.41$$

is shown in figure 10.

9. Discussion of Results Before discussing the graphical presentation of results in figures 7 and 8 we shall point out an important difference between the displacement of the Maxwell material and that of the Kelvin material.

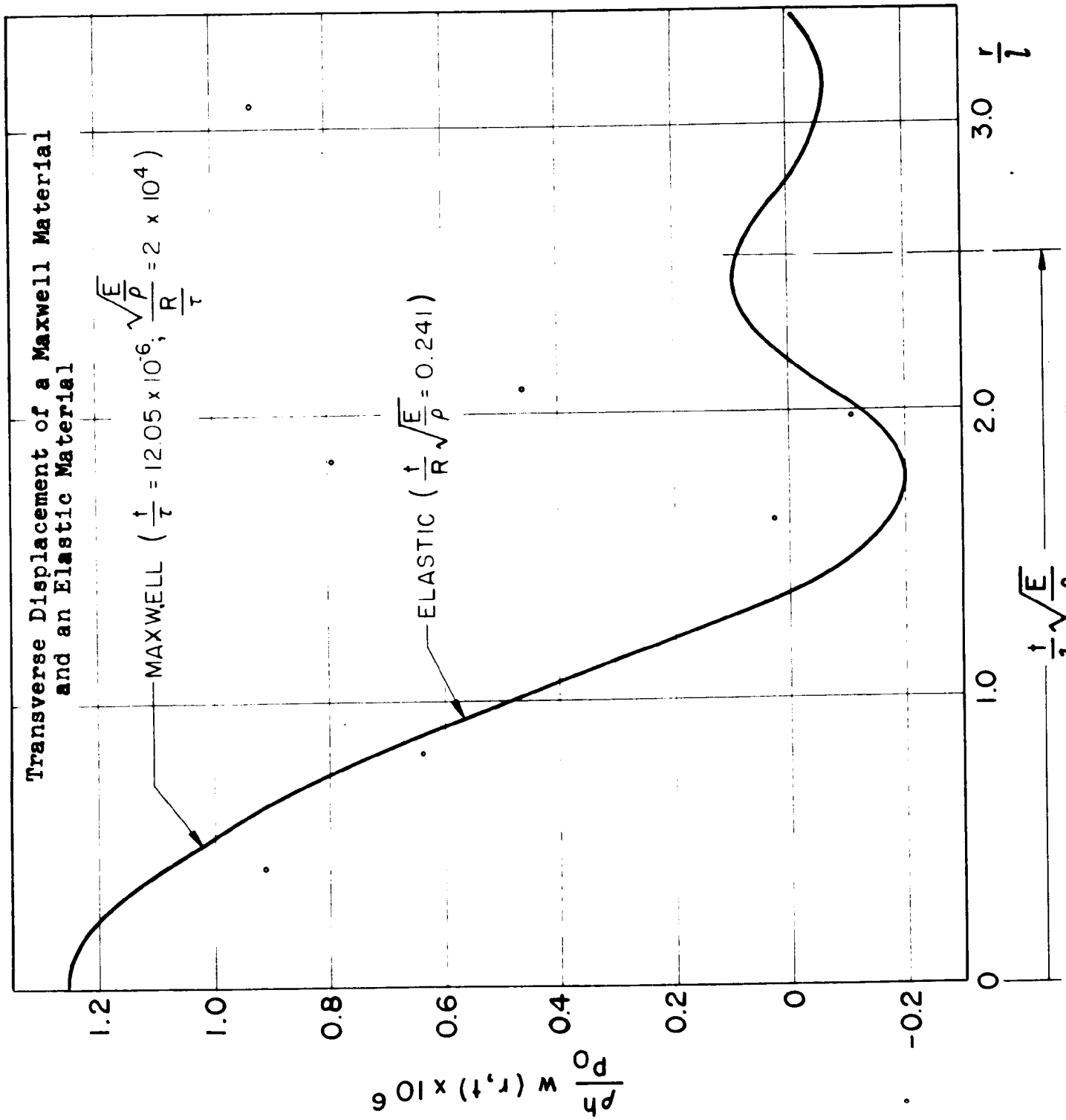
Transverse Displacement of a Maxwell Material and an Elastic Material
MAXWELL ($\frac{t}{\tau}$ = 12.05 x 10^{-6}; $\frac{\sqrt{\frac{E}{\rho}}}{\frac{R}{\tau}}$ = 2 x 10^4)
ELASTIC ($\frac{t}{R}\sqrt{\frac{E}{\rho}}$ = 0.241)
$\frac{\rho h}{P_o}$ w (r,t) x 10^6
1.2
1.0
0.8
0.6
0.4
0.2
0
-0.2
0
1.0
2.0
3.0
$\frac{r}{l}$
$\frac{t}{l}\sqrt{\frac{E}{\rho}}$

Figure 7

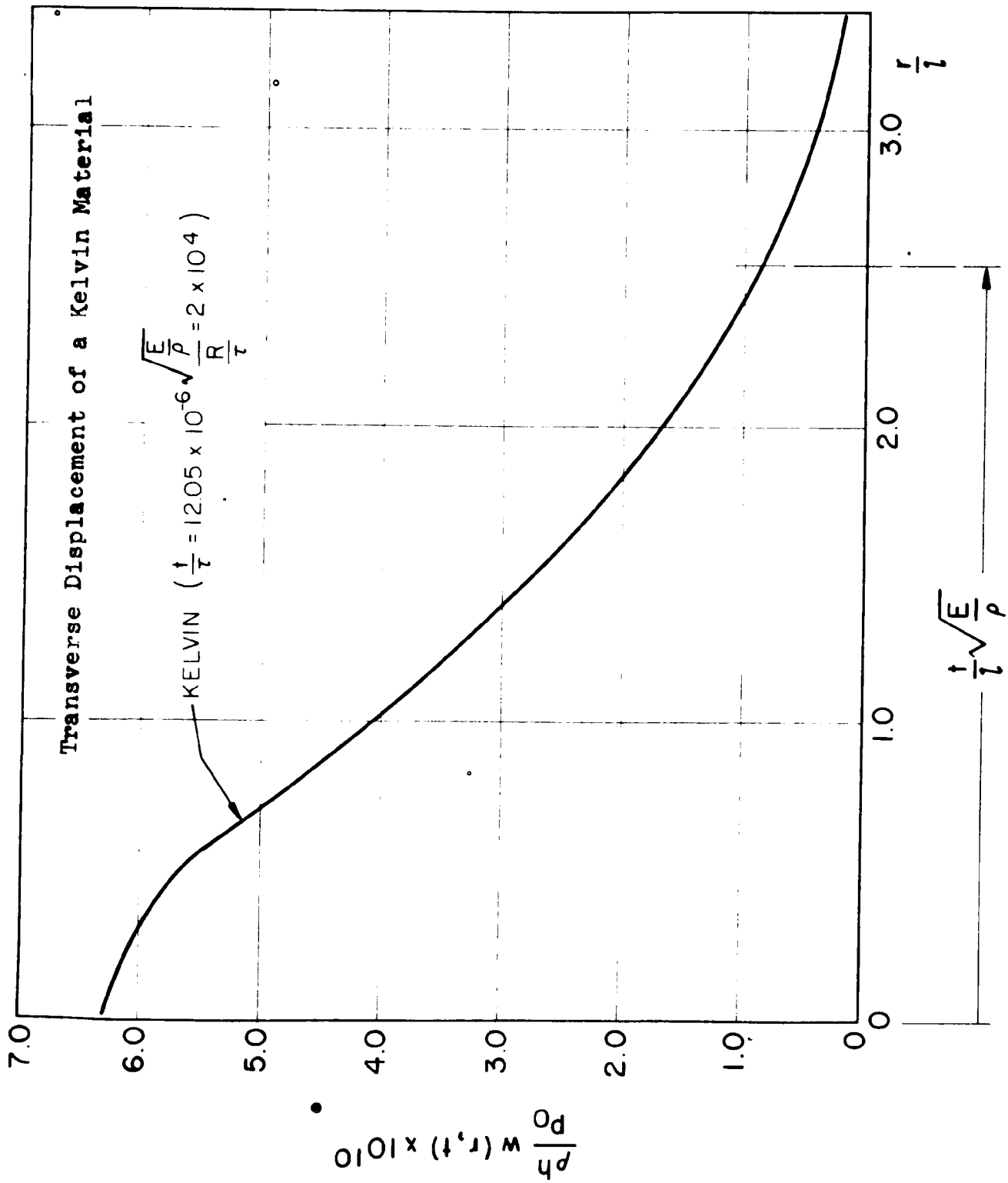
Transverse Displacement of a Kelvin Material
KELVIN $\left(\frac{t}{\tau} = 12.05 \times 10^{-6}\sqrt{\frac{E}{\rho}}\frac{R}{\tau} = 2 \times 10^4\right)$
$\frac{\rho h}{p_o} w(r,t) \times 10^{10}$
$\frac{r}{l}$
$\frac{t}{l}\sqrt{\frac{E}{\rho}}$
0
1.0
2.0
3.0
4.0
5.0
6.0
7.0

Figure 8

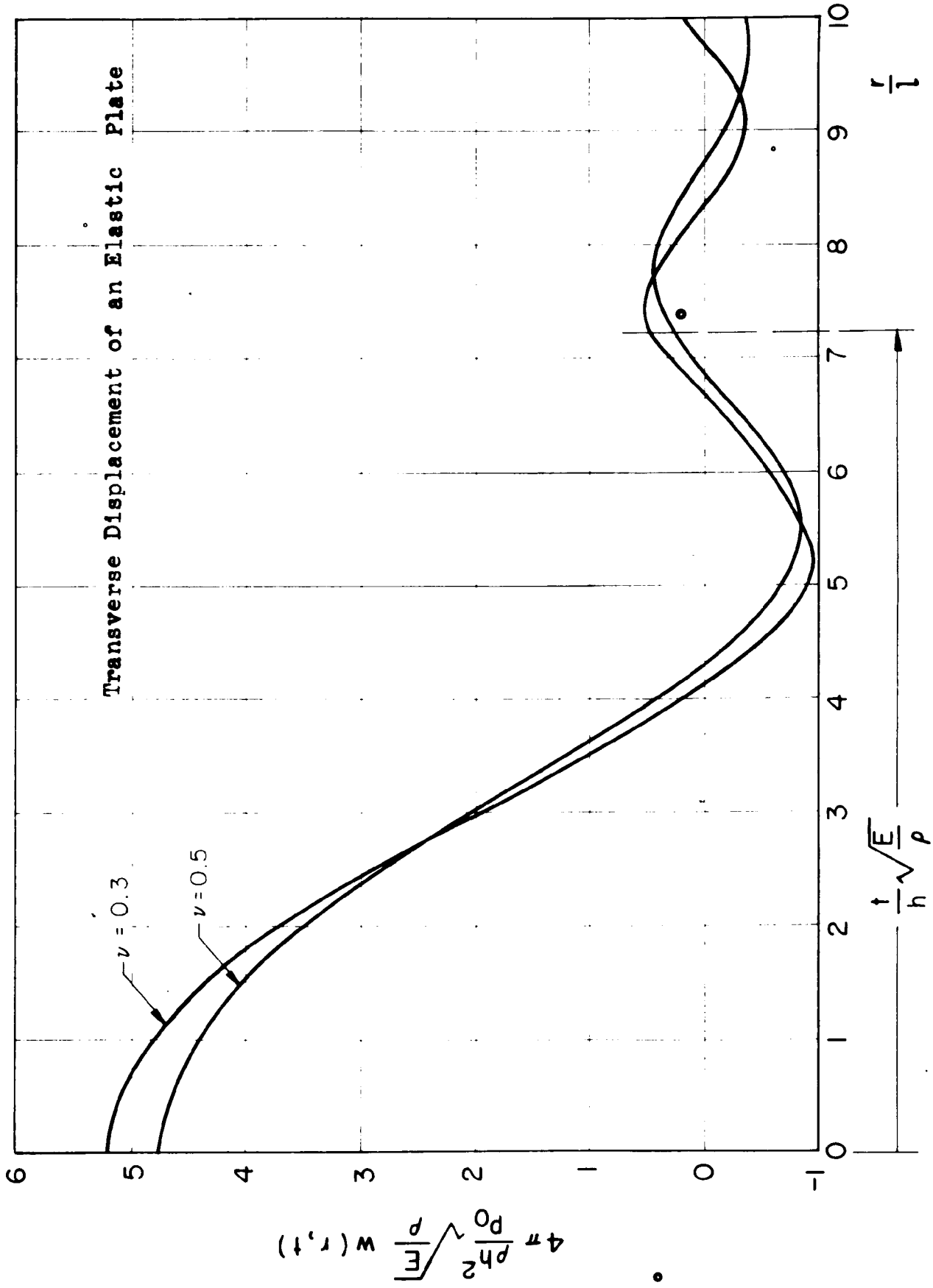
Transverse Displacement of an Elastic Plate
$\nu = 0.3$
$\nu = 0.5$
$\frac{t}{h}\sqrt{\frac{E}{\rho}}$
$\frac{r}{l}$
$4\pi \frac{\rho h^2}{P_0}\sqrt{\frac{E}{\rho}}\, w(r,t)$

Figure 9

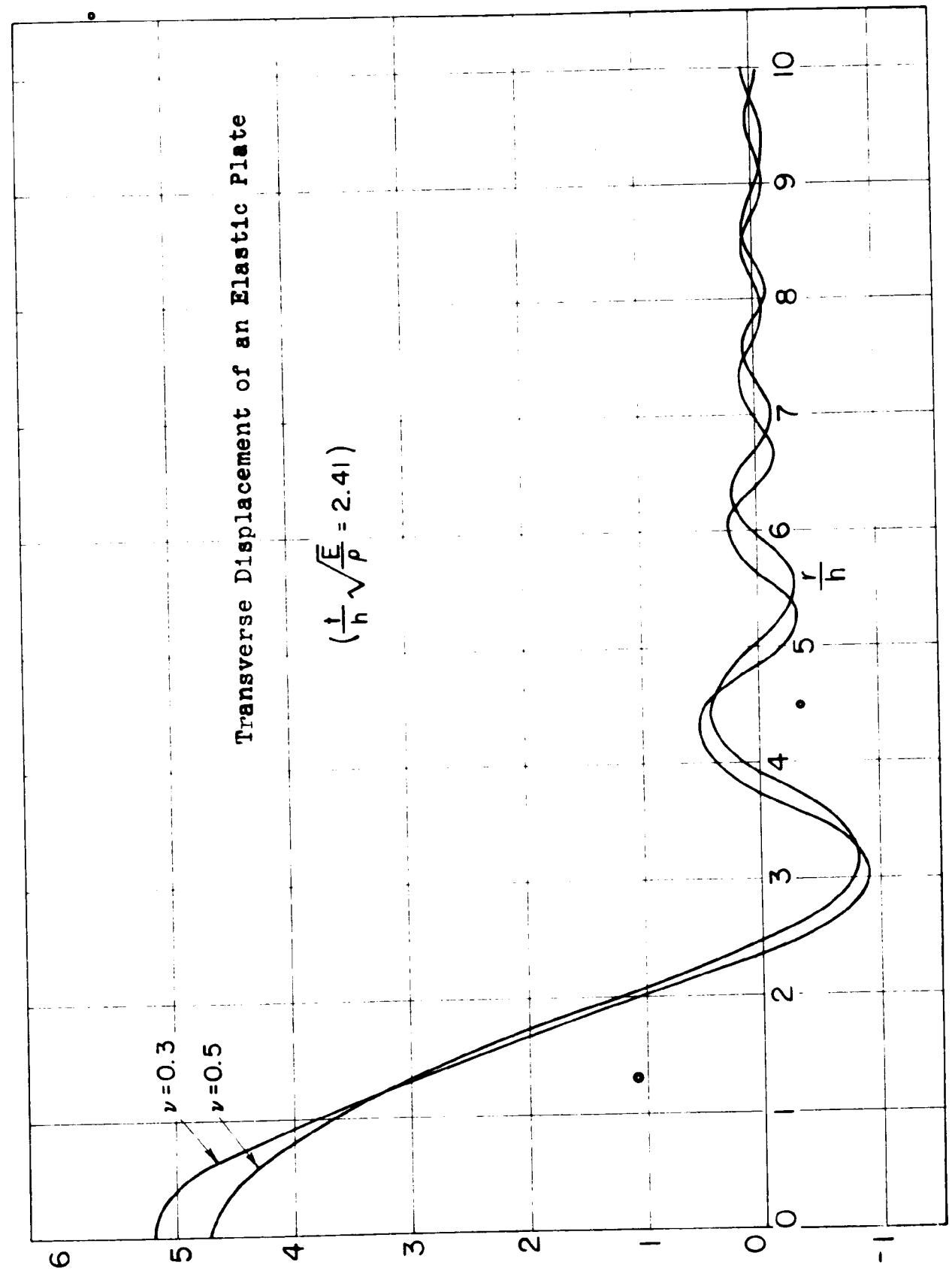
Transverse Displacement of an Elastic Plate
$(\frac{t}{h}\sqrt{\frac{E}{\rho}} = 2.41)$
$\nu = 0.3$
$\nu = 0.5$
$\frac{r}{h}$
$4\pi \frac{\rho h^2}{p_o}\sqrt{\frac{E}{\rho}}\, w\,(r,t)$

Figure 10

This is that the Maxwell body will assume permanent deformation under an instantaneous load, as shown in equation (4.78). As the time approaches infinity the second term in the integrand dies out, but the first term remains, so that we are left with a non-sero value of the displacement. No such effect is found in the Kelvin material. Reference to the one-dimensional model associated with the respective media shows that the result is not unexpected, since in the Maxwell material there is no restoring force such as there is in the case of the Kelvin material. It follows that permanent deformation of a Maxwell material is not found in the case of an oscillatory load because the load itself supplies the restoring force which is missing in the case of the instantaneous load. Another way of looking at this is to consider that each half cycle of the load leaves the material with some permanent deformation, but since this is cancelled by the succeeding half cycle, the net effect is zero. Should the oscillatory load be removed when there is some non-zero displacement of the material, then a permanent deformation will remain.

The particular displacement contours shown in figures 7 and 8 may be explained in terms of the models, or equivalently, in terms of the nature of the governing displacement equations. In the case of impace loading of a viscoelastic rod Lee and Kantor [51] found similar results and Lee ascribed it to the fact that the equations for the Maxwell and elastic materials are hyperbolic, and therefore

admit wave phenonena, while the equation for a Kelvin material is parabolic and represents a diffusion phenomenon. On the other hand, a physical explanation, based upon the one-dimensional model is merely that for an instantaneous load the damper acts like a rigid connection (a connection for which $E \to \infty$) immediately after impact so that the response is primarily from the elastic elements in the model, while in the Kelvin material the damper again acts like a rigid connection immediately after impact and transmits much of the blow to the supporting foundation. The mass in the system then slowly begins to move.

It is of interest to note that in all three media, as well as in the case of the elastic plate, at any instant of time greater than zero and for any finite distance from the origin there is some small disturbance resulting from the instantaneous load applied at time zero. This implies that some components of the response have extremely high velocities, and that the plate and shell act as dispersive conductors of transverse waves. It is this dispersion effect which makes it impossible to clearly locate the wave front of the disturbance in either the elastic or viscoelastic material. Discussion of a wave front in the case of a viscoelastic Kelvin material is patently out of the question since it gives rise to a diffusion type of disturbance.

If, for purposes of discussion, we consider the innermost zero value of the disturbance shown in figures 7, 9

and 10 as defining a psuedo wave front we find that this front moves with a lesser velocity than that of a sound wave, whose velocity is

$$\sqrt{\frac{E}{\rho}}$$

The position of this latter hypothetical wave front, considered as originating at the outer edge of the loaded region at the time of impact and moving outward with the above velocity, is shown by the vertical dashed line in the figures 7 through 10.

Figures 7, 8 and 9 represent equivalent times for each of the respective bodies, so that the difference between the position of the psuedo wave front and the reference hypothetical sound wave may not be attributed to the curvature of the shell on the basis of the difference between the radial distance and the arc length.

CHAPTER V

THE STEADY STATE VISCOELASTIC SOLUTION

1. Introduction In this chapter we shall obtain, in the Laplace transform plane, an exact (within the scope of the theory of thin shells) solution of the system of simultaneous differential equations for a shallow viscoelastic spherical shell given in Chapter III, equations (3.50) and (3.51). We shall then obtain the elastic solution as a by-product of the viscoelastic solution by allowing the relaxation time, or the retardation time, to approach the limiting elastic value. In this form the result may be compared with existing solutions. The last part of this chapter will be devoted to the viscoelastic solution as specialized to the Kelvin and Maxwell models.

2. Solution of the Differential Equations in the Laplace Transform Plane Reproducing equations (3.50) and (3.51) of Chapter III, we shall first appeal to the correspondence principle and replace the elastic moduli by their operator counterparts and then apply the Laplace transform to the system to obtain, for $e^{i\omega t}$ time dependence,

$$D(s)\nabla^4\bar{w} + \frac{1}{R}\nabla^2\bar{F} + \rho h \bar{w} s^2 = \frac{p}{s - i\omega} \tag{5.1}$$

$$\nabla^4 \bar{F} - \frac{h E(s)}{R} \nabla^2 \bar{w} = 0 \quad , \qquad (5.2)$$

$$D(s) = \frac{h^3}{12} \frac{P_2(s)[P_2(s)P_3(s) + 2P_1(s)P_4(s)]}{P_1(s)[P_1(s)P_4(s) + 2P_2(s)P_3(s)]} \quad , \qquad (5.3)$$

and

$$E(s) = \frac{3 P_2(s) P_4(s)}{P_2(s) P_3(s) + 2 P_1(s) P_4(s)} \quad , \qquad (5.4)$$

and where

$$\nabla^2 \equiv \frac{\partial^2}{\partial r^2} + \frac{1}{r} \frac{\partial}{\partial r} \quad ,$$

and where

h is the shell thickness, R is the shell radius.

The Laplace transform of the displacement will be denoted by $\bar{w}$, where

$$\bar{w}(r, s) = \int_0^\infty e^{-st} w(r, t)\, dt \, ,$$

which is defined in (5.5). A similar definition holds for the Laplace transform of the Airy stress function, denoted by $\bar{F}$.

The solution (5.1) and (5.2) in the Laplace space is of the form

$$\bar{w}(r,s) = C_1(s) J_0[\lambda(s) r] + C_2(s) Y_0[\lambda(s) r]$$

$$+ C_3(s) I_0[\lambda(s) r] + C_4(s) K_0[\lambda(s) r]$$

$$+ C_6(s) \ln \frac{r}{l} + C_5(s), \qquad (5.5)$$

and

$$\bar{F}(r,s) = -\frac{h E(s)}{R \lambda^2(s)} \left\{ C_1(s) J_0[\lambda(s) r] \right.$$

$$+ C_2(s) Y_0[\lambda(s) r] - C_3(s) I_0[\lambda(s) r]$$

$$\left. - C_4(s) K_0[\lambda(s) r] \right\} + B_5(s) r^2 + B_6(s) r^2 \ln \frac{r}{l}$$

$$+ C_8(s) \ln \frac{r}{l} + C_7(s), \qquad (5.6)$$

where

$$\lambda^4(s) = -\left[\frac{h E(s)}{R^2 D(s)} + \frac{\rho h}{D(s)} s^2 \right],$$

and

$$l = \frac{\sqrt{Rh}}{[12(1-\nu^2)]^{\frac{1}{4}}},$$

and where the Bessel functions are denoted by the symbols used in Watson. Substitution of (5.5) and (5.6) into (5.1) and (5.2) shows that

$$D(s)\left[-\frac{hE(s)}{R^2D(s)} - \rho\frac{hs^2}{D(s)}\right]\left\{C_1(s)J_0[\lambda(s)r] + C_2(s)Y_0[\lambda(s)r] + C_3(s)I_0[\lambda(s)r] + C_4(s)K_0[\lambda(s)r]\right\}$$

$$+ \frac{hE(s)}{R^2}\left\{C_1(s)J_0[\lambda(s)r] + C_2(s)Y_0[\lambda(s)r] + C_3(s)I_0[\lambda(s)r] + C_4(s)K_0[\lambda(s)r]\right\} + \frac{4}{R}B_5(s)$$

$$+ \frac{4}{R}\left(\ln\frac{r}{l}+1\right)B_6(s) + \rho hs^2\left\{C_1(s)J_0[\lambda(s)r] + C_2(s)Y_0[\lambda(s)r] + C_3(s)I_0[\lambda(s)r] + C_4(s)K_0[\lambda(s)r]\right\}$$

$$+ \rho hs^2C_6(s)\ln\frac{r}{l} + \rho hs^2C_5(s) = \frac{p}{s-i\omega}.$$

By equating coefficients we are able to establish that the solution is exact; and the particular solution is therefore exact. We have, furthermore, the following relations:

$$\frac{4}{R}(B_5 + B_6) + \rho h s^2 C_5(s) = \frac{p}{s - i\omega} , \quad (5.7)$$

$$\frac{4}{R} B_6 = -\rho h s^2 C_6(s) . \quad (5.8)$$

Substitution for $B_6(s)$ from (5.8) into (5.7) gives

$$B_5(s) = \frac{p}{4(s-i\omega)} + \frac{R}{4}\rho h s^2 [C_6(s) - C_5(s)], \quad (5.9)$$

from which one may conclude, according to Reissner, that

$$B_6(s) = C_6(s) = 0$$

in order to have no circumferential displacement. Without loss of generality, since it plays no part in the stresses, we may also set

$$C_7(s) = 0 .$$

Thus (5.5) and (5.6) become

$$\bar{w}(r, s) = C_1(s) J_0[\lambda(s) r] + C_2(s) Y_0[\lambda(s) r] + C_3(s) I_0[\lambda(s) r] + C_4(s) K_0[\lambda(s) r] + C_5(s) , \quad (5.10)$$

$$F(r,s) = -\frac{hE(s)}{R\lambda^2(s)}\left\{C_1(s)\,J_0[\lambda(s)r] + C_2(s)\,Y_0[\lambda(s)r] - C_3(s)\,I_0[\lambda(s)r] - C_4(s)\,K_0[\lambda(s)r]\right\} + \left[\frac{pR}{4(s-i\omega)} - \frac{R}{4}\rho h s^2 C_5(s)\right] r^2 + C_8(s)\ln\frac{r}{l}, \tag{5.11}$$

for the loaded region defined by the inequality $r \leq a$, where a is the radius of the uniformly loaded region. For the unloaded region, defined by the inequality $r > a$, the expressions for the displacement and the Airy stress function may be obtained from (5.10) and (5.11) by replacing p by 0. In (5.10) and (5.11) the $\lambda(s)$ is that given on p. 123.

For future reference we shall define

$$\lambda(s) = e^{i\frac{\pi}{4}}\lambda_0(s) \tag{5.12}$$

and introduce the Kelvin functions and their relation to Bessel functions. The relations are, for complex arguments,

$$J_0(e^{i\frac{\pi}{4}}z) = \text{ber}\, z - i\,\text{bei}\, z,$$

$$I_0(e^{i\frac{\pi}{4}}z) = \text{ber}\, z + i\,\text{bei}\, z,$$

$$K_0(e^{i\frac{\pi}{4}}z) = \text{ker}\, z + i\,\text{kei}\, z. \quad (5.13)$$

For simplicity in reduction to the elastic case and comparison with existing solutions, we shall introduce a function $Y_0(z)$ defined by the expression

$$Y_0(e^{i\frac{\pi}{4}}z) = \frac{2}{\pi}\left[-\text{ker}\, z + i\,\text{kei}\, z\right], \quad (5.14)$$

which is seen to be linearly independent of the functions in (5.13), because it is the negative complex conjugate of $K_0(e^{i\frac{\pi}{4}}z)$, and which has the property that

$$\nabla^2 Y_0(\lambda r) = -\lambda^2 Y_0(\lambda r). \quad (5.15)$$

In the remainder of this chapter we shall refer to the loaded region of the shell as region ① and to the unloaded region of the shell as region ②.

3. Boundary and Initial Conditions Consistant with the discussion in Chapter II, secion 3, we shall assume that the displacement and the stresses are initially zero. Specifically, that

$$w(r,0) = F(r,0) = 0,$$

$$w'(r,0) = 0, \quad (5.16)$$

in regions ① and ②.

The boundary conditions in region ① are that $\bar{w}(r,s)$ and $\bar{F}(r,s)$ remain finite everywhere and in region ② that $\bar{w}(r,s)$ and $\bar{\sigma}_{ij}(r,s) \to 0$ as $r \to \infty$. (5.17)

The conditions on the boundary $r = a$ are that

$$\bar{w}_{①}(a,s) = \bar{w}_{②}(a,s), \tag{5.18}$$

$$\bar{w}_{①}'(a,s) = \bar{w}_{②}'(a,s), \tag{5.19}$$

$$\nabla^2 \bar{w}_{①}(a,s) = \nabla^2 \bar{w}_{②}(a,s), \tag{5.20}$$

$$[\nabla^2 \bar{w}_{①}(a,s)]' = [\nabla^2 \bar{w}_{②}(a,s)]', \tag{5.21}$$

$$F_{①}'(a,s) = F_{②}'(a,s), \tag{5.22}$$

$$\nabla^2 F_{①}(a,s) = \nabla^2 F_{②}(a,s), \tag{5.23}$$

where

$$(\,)' \equiv \frac{\partial}{\partial r}(\,),$$

and where the subscripts indicate from which regions the expressions are to be obtained. Boundary conditions (5.16) and (5.17) dictate that in region ① the displacement and stress function be of the form

$$\bar{w}(r,s) = C_1(s) J_0[\lambda(s) r] + C_3(s) I_0[\lambda(s) r] + C_5(s) \tag{5.24}$$

$$\bar{F}(r,s) = -\frac{hE(s)}{R\lambda^2(s)} \left\{ C_1(s) J_0[\lambda(s) r] - C_3(s) I_0[\lambda(s) r] \right\} + \left[\frac{p}{4(s-i\omega)} - \frac{R}{4} \rho h s^2 C_5(s) \right] r^2 \tag{5.25}$$

and that in region (2) they be of the form

$$\bar{w}(r,s) = C_2(s) Y_0[\lambda(s) r] + C_4(s) K_0[\lambda(s) r] \tag{5.26}$$

$$\bar{F}(r,s) = -\frac{hE(s)}{R\lambda^2(s)} \left\{ C_2(s) Y_0[\lambda(s) r] - C_4(s) K_0[\lambda(s) r] \right\} + C_8 \ln \frac{r}{l} . \tag{5.27}$$

Substitution of (5.24) through (5.27) into equations (5.18) through (5.23) gives rise to the following six equations from which we can determine the six unknown coefficients $C_1(s),\ldots,C_5(s)$, and $C_8(s)$:

$$C_1(s) J_0[\lambda(s) r] + C_3(s) I_0[\lambda(s) r] + C_5(s) = C_2(s) Y_0[\lambda(s) r] + C_4(s) K_0[\lambda(s) r], \tag{5.28}$$

$$- C_1(s)\, J_0'[\lambda(s) r] + C_3(s)\, I_0'[\lambda(s) r]$$

$$= C_2(s)\, Y_0'[\lambda(s) r] + C_4(s)\, K_0'[\lambda(s) r], \tag{5.29}$$

$$- C_1(s)\, J_0[\lambda(s) r] + C_3(s)\, I_0[\lambda(s) r]$$

$$= - C_2(s)\, Y_0[\lambda(s) r] + C_4(s)\, K_0[\lambda(s) r], \tag{5.30}$$

$$- C_1(s)\, J'[\lambda(s) r] + C_3(s)\, I_0'[\lambda(s) r]$$

$$= - C_2(s)\, Y_0'[\lambda(s) r] + C_4(s)\, K_0'[\lambda(s) r], \tag{5.31}$$

$$- \frac{hE(s)}{R\lambda(s)} \left\{ C_1(s)\, J_0'[\lambda(s) r] - C_3(s)\, I_0'[\lambda(s) r] \right\}$$

$$+ \frac{1}{2} \left[\frac{bR}{s - i\omega} - \rho h s^2 R C_5(s) \right] a$$

$$= - \frac{hE(s)}{R\lambda(s)} \left\{ C_2(s)\, Y_0'[\lambda(s) r] - C_4(s) K_0'[\lambda(s) r] \right.$$

$$\left. + \frac{1}{a} C_8(s) \right), \tag{5.32}$$

$$\frac{hE(s)}{R} \left\{ C_1(s)\, J_0[\lambda(s) r] + C_3(s)\, I_0[\lambda(s) r] \right.$$

$$+ \frac{pR}{s - i\omega} - \rho h s^2 R C_5(s)$$

$$= \frac{h E(s)}{R}\left\{C_2(s) Y_0[\lambda(s) r] + C_4(s) K_0[\lambda(s) r]\right\} . \tag{5.33}$$

4. Determination of the Coefficients $C_k(s)$ The determination of the six coefficients from the preceeding six equations is a straightforward process, and may be accomplished in the following manner. Multiply (5.33) by $\frac{R}{hE(s)}$ and subsract (5.28) from the result to get

$$\frac{R}{hE(s)}\left[\frac{pR}{s - i\omega} - \rho h s^2 C_5(s)\right] - C_5(s) = 0 ,$$

which is to say that

$$C_5(s) = \frac{p}{\rho h (s - i\omega)\left[s^2 + \frac{E(s)}{\rho R^2}\right]} . \tag{5.34}$$

Addition of (5.29) to (5.31) gives

$$C_3 I_0'[\lambda(s) r] = C_4(s) K_0'[\lambda(s) r] ,$$

or

$$C_3(s) = C_4(s) \frac{K_0'[\lambda(s) r]}{I_0'[\lambda(s) r]} , \tag{5.35}$$

while subtraction of (5.29) from (5.31) gives

$$C_1(s) J_0'[\lambda(s) r] = C_2(s) Y_0'[\lambda(s) r] ,$$

or

$$C_1(s) = C_2(s) \frac{Y_0'[\lambda(s) r]}{J_0'[\lambda(s) r]} . \tag{5.36}$$

If we next substitute into (5.28) from (5.34), (5.35) and (5.36), we find that

$$C_2(s)\,\frac{Y_0'[\lambda(s)r]}{J_0'[\lambda(s)r]} + C_4(s)\,\frac{K_0'[\lambda(s)r]}{I_0'[\lambda(s)r]}\,I_0[\lambda(s)r]$$

$$- \frac{p}{\rho h (s-i\omega)\left[s^2 + \frac{E(s)}{\rho R^2}\right]}$$

$$= C_2(s)\,Y_0[\lambda(s)r] + C_4(s)\,K_0[\lambda(s)r],$$

$$C_4(s) =$$

$$\left\{C_2(s)\left\{\frac{Y_0'[\lambda(s)r]\,J_0[\lambda(s)r]}{K_0'[\lambda(s)r]\,J_0'[\lambda(s)r]} - \frac{Y_0[\lambda(s)r]}{K_0'[\lambda(s)r]}\right\}\right.$$

$$\left. + \frac{p}{\rho h (s-i\omega)\left[s^2 + \frac{E(s)}{\rho R^2}\right]}\right\}$$

$$\left\{\frac{K_0[\lambda(s)r]}{K_0'[\lambda(s)r]} - \frac{I_0[\lambda(s)r]}{I_0'[\lambda(s)r]}\right\}^{-1}. \qquad (5.37)$$

Similarly substitution for C_1, C_3, and C_4 into (5.30) from (5.35), (5.36) and (5.37) gives

$$C_2(s) \cdot$$

$$= \frac{p}{2\rho h (s - i\omega)\left[s^2 + \frac{E(s)}{\rho R^2}\right]\left[\psi_0[\lambda(s)r] - \frac{J_0[\lambda(s)r]}{J_0'[\lambda(s)r]}\psi_0'[\lambda(s)r]\right]} \cdot$$

(5.38)

From equation (5.38) we may substitute for $C_2(a)$ in (5.37) to get

$$C_4(s) = \frac{-p}{2\rho h (s - i\omega)\left[s^2 + \frac{E(s)}{\rho R^2}\right]}$$

$$\times \left\{ \frac{I_0[\lambda(s)r]}{I_0'[\lambda(s)r]} K_0'[\lambda(s)r] - K_0[\lambda(s)r] \right\}^{-1} \cdot$$

(5.39)

Now from (5.36) and (5.38)

$$C_1(s) = \frac{p}{2\rho h (s - i\omega)\left[s^2 + \frac{E(s)}{\rho R^2}\right]}$$

$$\left\{ \frac{Y_0[\lambda(s)r]}{Y_0'[\lambda(s)r]} J_0'[\lambda(s)r] - J_0[\lambda(s)r] \right\}^{-1}, \tag{5.40}$$

and from (5.35) and (5.39)

$$C_3(s) = -\frac{p}{2\rho h(s-i\omega)\left[s^2 + \frac{E(s)}{\rho R^2}\right]}$$

$$\left\{ I_0[\lambda(s)r] - \frac{K_0[\lambda(s)r]}{K_0'[\lambda(s)r]} I_0'[\lambda(s)r] \right\}^{-1}, \tag{5.41}$$

and last, from (5.32)

$$C_8(s) =$$

$$\frac{hE(s)}{R\lambda(s)} \left\{ C_2(s) Y_0'[\lambda(s)r] - C_4(s) K_0'[\lambda(s)r] \right.$$

$$\left. - C_1(s) J_0'[\lambda(s)r] + C_3(s) I_0'[\lambda(s)r] \right\} a$$

$$+ \frac{1}{2}\left[\frac{pR}{s-i\omega} - \rho h R s^2 C_5(s) \right] a^2,$$

so that with the aid of (5.38) through (5.41) one may write that

$$C_8(s) = \frac{\rho E a^2}{2\rho R (s - i\omega)\left[s^2 + \frac{E(s)}{\rho R^2} \right]} . \tag{5.42}$$

Insertion of these values for the constants into the expressions (5.24) and (5.25) reveals that the displacement and Airy stress function are given by

$$\bar{w}(r,s) = \frac{\rho}{2\rho h (s - i\omega)\left[s^2 + \frac{E(s)}{\rho R^2} \right]} \left\{ 2 \right.$$

$$+ \frac{J_0[\lambda(s) r]}{\frac{Y_0[\lambda(s) r]}{Y_0'[\lambda(s) r]} J_0'[\lambda(s) r] - J_0[\lambda(s) r]}$$

$$\left. + \frac{I_0[\lambda(s) r]}{\frac{K_0[\lambda(s) r]}{K_0'[\lambda(s) r]} I_0'[\lambda(s) r] - I_0'[\lambda(s) r]} \right\}, \tag{5.43}$$

in (1)

and

$$\bar{F}(r,s) = \frac{p E(s)}{2\rho R \lambda^2(s)(s-i\omega)\left[s^2 + \frac{E(s)}{\rho R^2}\right]} \left\{ \frac{\lambda^2(s) r^2}{2} \right.$$

$$- \frac{J_0[\lambda(s) r]}{\frac{Y_0[\lambda(s) r]}{Y_0'[\lambda(s) r]} J_0'[\lambda(s) r] - J_0[\lambda(s) r]}$$

$$\left. + \frac{I_0[\lambda(s) r]}{\frac{K_0[\lambda(s) r]}{K_0'[\lambda(s) r]} I_0'[\lambda(s) r] - I_0[\lambda(s) r]} \right\},$$

(5.44)

in (1)

and substitution of the appropriate constants into expressions (5.26) and (5.27) shows that

$$\bar{w}(r,s) = \frac{p}{2\rho h(s-i\omega)\left[s^2 + \frac{E(s)}{\rho R^2}\right]}$$

$$\left\{ \frac{Y_0[\lambda(s)r]}{\frac{J_0[\lambda(s)r]}{J_0'[\lambda(s)r]} Y_0'[\lambda(s)r] - Y_0'[\lambda(s)r]} \right.$$

$$\left. + \frac{K_0[\lambda(s)r]}{\frac{I_0[\lambda(s)r]}{I_0'[\lambda(s)r]} K_0'[\lambda(s)r] - K_0[\lambda(s)r]} \right\},$$

(5.45)

in ②

$$\bar{F}(r,s) = \frac{p\,E(s)}{2\rho R \lambda^2(s)(s-i\omega)\left[s^2 + \frac{E(s)}{\rho R^2}\right]}$$

$$\left\{ \frac{Y_0[\lambda(s)r]}{\frac{J_0[\lambda(s)r]}{J_0'[\lambda(s)r]} Y_0'[\lambda(s)r] - Y_0[\lambda(s)r]} \right.$$

$$\left. - \frac{K_0[\lambda(s)r]}{\frac{I_0[\lambda(s)r]}{I_0'[\lambda(s)r]} K_0'[\lambda(s)r] - K_0[\lambda(s)r]} \right.$$

$$\left. + \lambda^2(s)\, a^2 \ln \frac{r}{l} \right\}. \qquad (5.46)$$

in ②

5. The Steady State Solution As alluded to by Lee [28] and used extensively in the electrical engineering field, the steady state may be obtained by replacing

$s - i\omega$ in the forcing function only by 1,

s elsewhere by $i\omega$.

The justification of the above alterations is evident upon comparison of the differential equation after the Laplace transformation has been applied with the differential equation after an exponential time dependence $e^{i\omega t}$ has been assumed for the forcing function and for the dependent variables; in this case the displacement and the Airy stress function. The static solution may be found by setting $\omega = 0$

In the above exchange it is implicitly assumed that the dependent variables have zero initial conditions and that the derivatives to sufficiently high order are also zero initially.

6. The Elastic Case as a By-Product To emphasise that the reduction to the elastic case from the linear viscoelastic result is independent of the viscoelastic model used, we shall discuss the elastic reduction before considering the particular viscoelastic models. This independence is because in the linear viscoelastic theory the operator functions which replaced the elastic moduli according to the correspondence principle must, conversely, reduce to the elastic moduli which they replaced when the relaxation time, or the retardation time, is allowed to approach the elastic value.

Thus when

$$\nu(s) \rightarrow \nu, \qquad E(s) \rightarrow E,$$

$$D(s) \rightarrow D,$$

and when the reduction to the steady state is made as described in the preceeding section, we find that

$$\frac{p}{2\rho h(s-i\omega)\left[s^2+\frac{E(s)}{\rho R^2}\right]} \rightarrow \frac{p}{2\left[\frac{Eh}{R^2}-\rho h\omega^2\right]},$$

$$\frac{p\,E(s)}{2\rho R\lambda^2(s)(s-i\omega)\left[s^2+\frac{E(s)}{\rho R^2}\right]} \rightarrow \frac{pE}{2R\lambda^2\left[\frac{E}{R^2}-\rho\omega^2\right]},$$

$$\lambda(s) \rightarrow e^{i\frac{\pi}{4}}\left[\frac{Eh}{R^2D}-\rho\frac{h\omega^2}{D}\right]^{\frac{1}{4}}. \tag{5.48}$$

In order to avoid Kelvin or Bessel functions of complex arguments in the real case we shall write the results in terms of Kelvin functions for that case in which

$$\frac{E}{R^2} > \rho\omega^2.$$

The form of the displacement, moments and resultants will be considerably simplified if we introduce the following quantities:

$$\alpha(a) = \mathrm{kei}(\lambda_0 a)\,\mathrm{bei}'(\lambda_0 a) + \mathrm{ber}(\lambda_0 a)\,\mathrm{ker}'(\lambda_0 a) - \mathrm{ker}(\lambda_0 a)\,\mathrm{ber}'(\lambda_0 a) - \mathrm{bei}(\lambda_0 a)\,\mathrm{kei}'(\lambda_0 a), \tag{5.49}$$

$$\beta(a) = \mathrm{kei}(\lambda_0 a)\,\mathrm{ber}'(\lambda_0 a) + \mathrm{ker}(\lambda_0 a)\,\mathrm{bei}'(\lambda_0 a) - \mathrm{bei}(\lambda_0 a)\,\mathrm{ker}'(\lambda_0 a) - \mathrm{ber}(\lambda_0 a)\,\mathrm{kei}'(\lambda_0 a), \tag{5.50}$$

$$A_1(a,r) = \mathrm{bei}(\lambda_0 r)\,\mathrm{kei}'(\lambda_0 a) - \mathrm{ber}(\lambda_0 r)\,\mathrm{ker}'(\lambda_0 a), \tag{5.51}$$

$$B_1(a,r) = \mathrm{bei}(\lambda_0 r)\,\mathrm{ker}'(\lambda_0 a) + \mathrm{ber}(\lambda_0 r)\,\mathrm{kei}'(\lambda_0 a), \tag{5.52}$$

$$A_2(a,r) = \mathrm{ker}(\lambda_0 r)\,\mathrm{ber}'(\lambda_0 a) + \mathrm{ber}(\lambda_0 r)\,\mathrm{kei}'(\lambda_0 a), \tag{5.53}$$

$$B_2(a,r) = \mathrm{kei}(\lambda_0 r)\,\mathrm{ber}'(\lambda_0 a) + \mathrm{ker}(\lambda_0 r)\,\mathrm{bei}'(\lambda_0 a), \tag{5.54}$$

which are related to the Bessel functions and the $Y_0(\lambda r)$ function as

$$\frac{J_0(\lambda r)}{\frac{Y_0(\lambda a)}{Y_0'(\lambda a)} J_0'(\lambda a) - J_0(\lambda a)} = \frac{A_1 + i B_1}{\alpha + i \beta}, \quad (5.55)$$

$$\frac{I_0(\lambda r)}{\frac{K_0(\lambda a)}{K_0'(\lambda a)} J_0'(\lambda a) - J_0(\lambda a)} = \frac{A_1 - i B_1}{\alpha - i \beta}, \quad (5.56)$$

$$\frac{Y_0(\lambda r)}{\frac{J_0(\lambda a)}{J_0'(\lambda a)} Y_0'(\lambda a) - Y_0(\lambda a)} = \frac{A_2 - i B_2}{\alpha + i \beta}, \quad (5.57)$$

$$\frac{K_0(\lambda r)}{\frac{I_0(\lambda a)}{I_0'(\lambda a)} K_0'(\lambda a) - K_0(\lambda a)} = \frac{A_2 + i B_2}{\alpha - i \beta}. \quad (5.58)$$

In terms of the quantities defined in (5.49) through (5.54) we can then write that in region (1)

$$w(r) = \frac{R^2}{h} \frac{\frac{p}{E}}{\left[1 - \left(\frac{R\omega}{\sqrt{\frac{E}{\rho}}}\right)^2\right]} \left[1 + \frac{A_1\alpha + B_1\beta}{\alpha^2 + \beta^2}\right], \tag{5.59}$$

$$N_{rr} = \frac{1}{r}\frac{\partial F(r)}{\partial r} = \frac{pR}{1 - \left(\frac{R\omega}{\sqrt{\frac{E}{\rho}}}\right)^2} \left[\frac{1}{2} + \frac{1}{\lambda_0^2 r} \frac{(A_1\beta - B_1\alpha)'}{\alpha^2 + \beta^2}\right], \tag{5.60}$$

$$\nabla^2 F(r) = \frac{pR}{1 - \left(\frac{R\omega}{\sqrt{\frac{E}{\rho}}}\right)^2} \left[1 + \frac{A_1\alpha + B_1\beta}{\alpha^2 + \beta^2}\right], \tag{5.61}$$

$$\frac{1}{r}\frac{\partial w(r)}{\partial r} = \frac{R^2}{rh} \frac{\frac{p}{E}}{1 - \left(\frac{R\omega}{\sqrt{\frac{E}{\rho}}}\right)^2} \frac{(A_1\alpha + B_1\beta)'}{\alpha^2 + \beta^2}, \tag{5.62}$$

$$\nabla^2 w(r) = -\frac{R^2}{l^2} \frac{\frac{p}{Eh}}{\left[1 - \left(\frac{R\omega}{\sqrt{\frac{E}{\rho}}}\right)^2\right]^{\frac{1}{4}}} \frac{A_1\beta - B_1\alpha}{\alpha^2 + \beta^2}, \tag{5.63}$$

In region ② the corresponding quantities are written as

$$W(r) = -\frac{R^2}{h}\,\frac{\frac{p}{E}}{1-\left(\frac{R\omega}{\sqrt{\frac{E}{\rho}}}\right)^2}\,\frac{A_2\alpha - B_2\beta}{\alpha^2+\beta^2}, \tag{5.64}$$

$$N_{rr}(r) = \frac{1}{r}\frac{\partial F(r)}{\partial r} = \frac{pR}{1-\left(\frac{R\omega}{\sqrt{\frac{E}{\rho}}}\right)^2}\left[\frac{a^2}{2r^2}\right.$$

$$\left. \pm \frac{i}{\lambda_0^2 r}\,\frac{(A_2\beta + B_2\alpha)'}{\alpha^2+\beta^2}\right], \tag{5.65}$$

$$\nabla^2 F(r) = -\frac{pR}{1-\left(\frac{R\omega}{\sqrt{\frac{E}{\rho}}}\right)^2}\,\frac{A_2\alpha - B_2\beta}{\alpha^2+\beta^2}, \tag{5.66}$$

$$\frac{1}{r}\frac{\partial W(r)}{\partial r} = -\frac{R^2}{rh}\,\frac{\frac{p}{E}}{1-\left(\frac{R\omega}{\sqrt{\frac{E}{\rho}}}\right)^2}\,\frac{(A_2\alpha - B_2\beta)'}{\alpha^2+\beta^2}, \tag{5.67}$$

$$\nabla^2 W(r) = \frac{p}{E}\,\frac{\frac{R^2}{hl^2}}{\left[1-\left(\frac{R\omega}{\sqrt{\frac{E}{\rho}}}\right)^2\right]^{\frac{1}{2}}}\,\frac{A_2\beta + B_2\alpha}{\alpha^2+\beta^2}. \tag{5.68}$$

In that frequency domain defined by the inequality

$$\frac{E}{R^2} \leq \rho\omega^2$$

a re-examination of the differential equations and the boundary conditions will show that the real part of the solution may be obtained from the forms (5.43), (5.44), (5.45) and (5.46) by replacing $Y_0(z)$ by $Y_0(z)$ where the latter is the Bessel function of the second kind. We shall record the following results:

In region (1)

$$w(r) = -\frac{\frac{1}{2}\frac{R^2}{h}\frac{p}{E}}{\left(\frac{R\omega}{\sqrt{\frac{E}{\rho}}}\right)^2 - 1}\left[\frac{J_0(\lambda r)}{\frac{Y_0(\lambda a)}{Y_1(\lambda a)}J_1(\lambda a) - J_0(\lambda a)}\right.$$

$$\left. - \frac{I_0(\lambda r)}{\frac{K_0(\lambda a)}{K_1(\lambda a)}I_1(\lambda a) - I_0(\lambda a)} + 2\right]; \qquad (5.69)$$

$$N_r(r) = \frac{1}{r}\frac{\partial F(r)}{\partial r} = -\frac{pR}{2\left[\left(\frac{R\omega}{\sqrt{\frac{E}{\rho}}}\right)^2 - 1\right]}\left\{1\right.$$

$$\left. - \frac{1}{r\left[\left(\frac{R\omega}{\sqrt{\frac{E}{\rho}}}\right)^2 - 1\right]^{\frac{1}{4}}}\left\{\frac{J_1(\lambda r)}{\frac{Y_0(\lambda a)}{Y_1(\lambda a)}J_1(\lambda a) - J_0(\lambda a)}\right.\right.$$

$$- \frac{I_1(\lambda r)}{\frac{K_0(\lambda a)}{K_1(\lambda a)} I_1(\lambda a) + I_0(\lambda a)} \Bigg\} \Bigg\}, \qquad (5.70)$$

$$\nabla^2 F(r) = -\frac{1}{2} \frac{\rho R}{\left(\frac{R\omega}{\sqrt{\frac{E}{\rho}}}\right)^2 - 1} \left\{ 2 \right.$$

$$+ \frac{J_0(\lambda r)}{\frac{Y_0(\lambda a)}{Y_1(\lambda a)} J_1(\lambda a) - J_0(\lambda a)}$$

$$\left. \pm \frac{I_0(\lambda r)}{\frac{K_0(\lambda a)}{K_1(\lambda a)} I_1(\lambda a) + I_0(\lambda a)} \right\}, \qquad (5.71)$$

$$\frac{1}{r} \frac{\partial w(r)}{\partial r} = \frac{1}{2h} \frac{\frac{\rho}{E}\left(\frac{R}{r}\right)^2 \frac{r}{l}}{\left[\left(\frac{R\omega}{\sqrt{\frac{E}{\rho}}}\right)^2 - 1\right]^{3/4}}$$

$$\left\{ \frac{J_1(\lambda r)}{\frac{Y_0(\lambda a)}{Y_1(\lambda a)} J_1(\lambda a) - J_0(\lambda a)} \right.$$

$$+ \frac{I_1(\lambda r)}{\frac{K_0(\lambda a)}{K_1(\lambda a)} I_1(\lambda a) + I_0(\lambda a)} \Bigg\}, \tag{5.72}$$

$$\nabla^2 w(r) = \frac{1}{2} \frac{\frac{p}{E}\left(\frac{R}{l}\right)^2 \frac{l}{h}}{\left[\left(\frac{R\omega}{\sqrt{\frac{E}{\rho}}}\right)^2 - 1\right]^{1/2}}$$

$$\left\{ \frac{J_0(\lambda r)}{\frac{Y_0(\lambda a)}{Y_1(\lambda a)} J_1(\lambda a) - J_0(\lambda a)} \right.$$

$$\left. + \frac{I_0(\lambda r)}{\frac{K_0(\lambda a)}{K_1(\lambda a)} I_1(\lambda a) + I_0(\lambda a)} \right\}, \tag{5.73}$$

We shall next record the corresponding values in region ② without further comment:

$$w(r) = \frac{\frac{p}{E}\frac{R^2}{h}}{2\left[\left(\frac{R\omega}{\sqrt{\frac{E}{\rho}}}\right)^2 - 1\right]} \left\{ \frac{Y_0(\lambda r)}{\frac{J_0(\lambda a)}{J_1(\lambda a)} Y_1(\lambda a) - Y_0(\lambda a)} \right.$$

$$- \frac{K_0(\lambda r)}{\frac{I_0(\lambda a)}{I_1(\lambda a)} K_1(\lambda a) + K_0(\lambda a)} \Bigg\}, \qquad (5.74)$$

$$\frac{1}{r}\frac{\partial F(r)}{\partial r} = -\frac{\rho R}{2\left[\left(\frac{R\omega}{\sqrt{\frac{E}{\rho}}}\right)^2 - 1\right]} \left\{ \frac{a^2}{r^2} \right.$$

$$- \frac{1}{r\left[\left(\frac{R\omega}{\sqrt{\frac{E}{\rho}}}\right)^2 - 1\right]^{\frac{1}{4}}} \left[\frac{Y_1(\lambda r)}{\frac{J_0(\lambda a)}{J_1(\lambda a)} Y_1(\lambda a) - Y_0(\lambda a)} \right.$$

$$\left. \left. + \frac{K_0(\lambda r)}{\frac{I_0(\lambda a)}{I_1(\lambda a)} K_1(\lambda a) - K_0(\lambda a)} \right] \right\}, \qquad (5.75)$$

$$\nabla^2 F(r) = \frac{1}{2} \frac{\rho R}{\left(\frac{R\omega}{\sqrt{\frac{E}{\rho}}}\right)^2 - 1}$$

$$\left\{ \frac{Y_0(\lambda r)}{\frac{J_0(\lambda a)}{J_1(\lambda a)} Y_1(\lambda a) - Y_0(\lambda a)} \right.$$

$$\left. - \frac{K_0(\lambda r)}{\frac{I_0(\lambda a)}{I_1(\lambda a)} K_1(\lambda a) + K_0(\lambda a)} \right\}, \qquad (5.76)$$

$$\frac{1}{r}\frac{\partial w(r)}{\partial r} = -\frac{1}{2h}\frac{\frac{p}{E}\left(\frac{R}{r}\right)^2\frac{r}{l}}{\left[\left(\frac{R\omega}{\sqrt{\frac{E}{\rho}}}\right)^2 - 1\right]^{3/4}}$$

$$\left[\frac{Y_1(\lambda r)}{\frac{J_0(\lambda a)}{J_1(\lambda a)} Y_1(\lambda a) - Y_0(\lambda a)}\right.$$

$$\left. - \frac{K_1(\lambda r)}{\frac{I_0(\lambda a)}{I_1(\lambda a)} K_1(\lambda a) + K_0(\lambda a)}\right], \tag{5.77}$$

$$\nabla^2 w(r) = -\frac{1}{2}\frac{p}{Eh}\frac{\left(\frac{R}{l}\right)^2}{\left[\left(\frac{R\omega}{\sqrt{\frac{E}{\rho}}}\right)^2 - 1\right]^{\frac{1}{2}}}$$

$$\left[\frac{Y_0(\lambda r)}{\frac{J_0(\lambda a)}{J_0(\lambda a)} Y_1(\lambda a) - Y_0(\lambda a)}\right.$$

$$\left. + \frac{K_0(\lambda r)}{\frac{I_0(\lambda a)}{I_1(\lambda a)} K_1(\lambda a) + K_0(\lambda a)}\right], \tag{5.78}$$

In the above recording the choice of the expressions written was motivated by the fact that the stress and moment resultants, which are usually written in the form

$$N_{rr} = \frac{1}{r}\frac{dF}{dr}, \qquad M_{rr} = -D\left(\frac{d^2w}{dr^2} + \frac{\nu}{r}\frac{\partial w}{\partial r}\right), \tag{5.79}$$

$$N_{\theta\theta} = \frac{d^2F}{dr^2}, \qquad M_{\theta\theta} = -D\left(\frac{1}{r}\frac{dw}{dr} + \nu\frac{d^2w}{dr^2}\right),$$

may just as well be written in the form

$$N_{rr} = \frac{1}{r}\frac{dF}{dr}, \qquad N_{\theta\theta} = \nabla^2 F - N_{rr},$$

$$M_{rr} = -D\left(\nabla^2 w - \frac{1-\nu}{r}\frac{dw}{dr}\right),$$

$$M_{\theta\theta} = -D\left(\nu\nabla^2 w + \frac{1-\nu}{r}\frac{dw}{dr}\right). \tag{5.80}$$

This latter form is more convenient here because of the derivative properties of the Bessel and Kelvin functions which make computation of the Laplacian of the Bessel and Kelvin functions much simpler than computation of the second derivative.

7. Comparison with Existing Solutions for Elastic Spherical Shallow Shells We shall compare the results listed above with results obtained by Reissner in [41] for the static elastic solution when the shell is subjected to a concentrated load at the apex, and with a second result

due to Reissner [43] for the dynamic response of an elastic shallow spherical shell subjected to an oscillating concentrated load at the apex of the shell.

Comparison in the first case may be had by returning to frequency domain

$$\frac{E}{R^2} > \rho\omega^2$$

and setting $p = \frac{Q}{\pi a}$ and $\omega = 0$ (5.81)

and taking the limit as $a \to 0$.

The limiting process requires the use of the following series expansions for the Kelvin functions and their first derivatives:

$$ber(\lambda_0 r) = 1 - \frac{\lambda_0^4 r^4}{2^6} + \cdots,$$

$$bei(\lambda_0 r) = \frac{\lambda_0^2 r^2}{2^2} - \frac{\lambda_0^6 r^6}{2^2 4^2 6^2} + \cdots,$$

$$ker(\lambda_0 r) = -\left[\gamma + \ln\frac{\lambda_0 r}{2}\right] + \frac{\pi\lambda_0^2 r^2}{2^4} + \cdots,$$

$$kei(\lambda_0 r) = -\frac{\pi}{4} + \left[1 - \gamma - \ln\frac{\lambda_0 r}{2}\right]\frac{\lambda_0^2 r^2}{2^2} + \cdots,$$

$$ber'(\lambda_0 r) = -\frac{\lambda_0^4 r^3}{2^4} + \frac{\lambda_0^8 r^7}{2^9 6^2} - \cdots,$$

$$\operatorname{bei}'(\lambda_0 r) = \frac{\lambda_0^2 r}{2} - \frac{\lambda_0^6 r^5}{2^6 \cdot 6} + \cdots,$$

$$\operatorname{ker}'(\lambda_0 r) = -\frac{1}{r} + \frac{\pi \lambda_0^2 r}{8} + \cdots,$$

$$\operatorname{kei}'(\lambda_0 r) = \left[\frac{1}{2} - \gamma - \ln \frac{\lambda_0 r}{2}\right] \frac{\lambda_0^2 r}{2} + \frac{\pi \lambda_0^4 r^3}{2^6} + \cdots, \tag{5.82}$$

in which γ is Euler's constant.

Passing to the limit we find that

$$A_2 \alpha - B_2 \beta \longrightarrow \frac{\lambda_0^2}{2} \operatorname{kei}(\lambda_0 r)$$

as $a \to 0$,

and also that

$$a(\alpha^2 + \beta^2) \to 1 \quad \text{as} \quad a \to 0,$$

so that the displacement in the static elastic case is given by

$$w(r) \to \frac{QR}{2\pi E h} 12\sqrt{1-\nu^2}\, \operatorname{kei}\left(\frac{r}{l}\right), \tag{5.83}$$

which is in agreement with the results obtained by Reissner. Similarly we find that, for the concentrated load,

$$F(r) \to -\frac{QR}{2\pi}\left[\ln \frac{r}{l} + \operatorname{ker}\left(\frac{r}{l}\right)\right]. \tag{5.84}$$

Reissner's dynamic concentrated load problem lies in the frequency range defined by

$$\frac{E}{R^2} < \rho\omega^2$$

as well, and comparison in this range may be had by taking the limiting values of the Bessel functions whose arguments contain a . The series begin as follows:

$$J_0(\lambda r) = 1 - \frac{(\lambda r)^2}{2^2} + \frac{(\lambda r)^4}{2^2 4^2} - \cdots ,$$

$$Y_0(\lambda r) = \frac{2}{\pi}\left[\gamma + \ln\frac{\lambda r}{2}\right]\left(1 - \frac{(\lambda r)^2}{2^2} + \cdots\right)$$

$$+ \frac{2}{\pi}\left[\left(\frac{\lambda r}{2}\right)^2 - \frac{1}{(2!)^2}\left(\frac{\lambda r}{2}\right)^4 + \cdots\right] ,$$

$$I_0(\lambda r) = 1 + \left(\frac{\lambda r}{2}\right)^2 + \frac{1}{(2!)^2}\left(\frac{\lambda r}{2}\right)^4 + \cdots ,$$

$$K_0(\lambda r) = i\frac{\pi}{2}\left[I_0(\lambda r) + i\,Y_0(\lambda r)\right] ,$$

$$J_0'(\lambda r) = -\lambda J_1(\lambda r)$$

$$= -\lambda\left[\frac{\lambda r}{2} - \frac{1}{2}\left(\frac{\lambda r}{2}\right)^3 + \cdots\right] ,$$

$$Y_0'(\lambda r) = -\lambda Y_1(\lambda r) = -\frac{2}{\pi r}$$

$$-\lambda\left[\frac{2}{\pi}\left(\gamma + \ln\frac{\lambda r}{2}\right)\right]J_1(\lambda r) + \cdots ,$$

$$- \frac{\lambda}{\pi}\left[\frac{\lambda r}{2} - \frac{5}{2}\,\frac{1}{2!}\left(\frac{\lambda r}{2}\right)^3 + \cdots\right],$$

$$I_0'(\lambda r) = \lambda\left[1 + \left(\frac{\lambda r}{2}\right)^2 + \frac{1}{2\cdot 2!}\left(\frac{\lambda r}{2}\right)^4 + \cdots\right],$$

$$K_0'(\lambda r) = -\lambda\left\{\frac{\lambda r}{2}\left[\ln\frac{\lambda r}{2} - \frac{1}{2}(1-2\gamma)\right]\right.$$

$$\left. + \frac{1}{2!}\left(\frac{\lambda r}{2}\right)^3\left[\ln\frac{\lambda r}{2} - \frac{1}{2}\left(2\gamma + \frac{5}{2}\right)\right] + \cdots\right.,$$

for real values of the argument. Replacing r by a in the above series and insertion into the relation (5.69) gives that

$$w(r) \longrightarrow \frac{Q}{4\pi D\lambda^2}\left[\frac{\pi}{2}Y_0(\lambda r) + K_0(\lambda r)\right]$$

$$\text{as} \quad a \longrightarrow 0. \qquad (5.85)$$

The Airy stress function may be found by a similar process, and results in the formula

$$F(r) \longrightarrow -\frac{QEh}{4\pi RD\lambda^4}\left[\frac{\pi}{2}Y_0(\lambda r) - K_0(\lambda r) - 2\ln\frac{r}{l}\right]$$

$$\text{as} \quad a \longrightarrow 0. \qquad (5.86)$$

8. The Viscoelastic Steady State--Maxwell Material

To discuss the viscoelastic steady state in any greater detail it is necessary to explicitly define the quantities $P_k(s)$, which is to say that one must choose some particular

viscoelastic model for further analysis. In this section we shall consider the Maxwell and Kelvin models which are essentially the two basic types. Other and more elaborate models may be considered as composites of these two.

As has been seen in the previous section, the expressions for the elastic material are cumbersome enough when E(s), D(s) and $\lambda_0(s)$ are just constants. When these are written as operator functions the expressions become extremely lengthy, and therefore we shall, in the discussion to follow, explicitly write the expressions for the argument of the special functions and the coefficients of the special function terms, but not the entire expressions for the displacement, its derivatives, or the various derivatives of the stress function.

The Maxwell material is characterised by the following choice of $P_k(s)$

$$P_1(s) = s + \frac{1}{\tau}, \qquad P_3(s) = s,$$

$$P_2(s) = 2\mu s, \qquad P_4(s) = 3K s.$$

Substitution of these expressions into the general operator analogues of the elastic moduli D and E gives, for the compressible Maxwell material

$$D(s) = \frac{h^3\mu}{3} \frac{[(\mu+3K)s + 3K\tau]s}{(4\mu+3K)s^2 + 2\tau(2\mu+3K)s + 3K\tau^2}, \tag{5.87}$$

$$E(s) = \frac{9\mu K s}{(\mu + 3K)s + 3K\tau}, \qquad (5.88)$$

$$\lambda_o^4(s) = \frac{3}{\mu h^2}\left[\rho s + \frac{9\mu K}{R^2}\frac{1}{(\mu+3K)\left[s + \frac{3K\tau}{\mu+3K}\right]}\right]$$

(5.89)

$$\frac{(4\mu+3K)\left[s^2 + \frac{2\tau(2\mu+3K)}{4\mu+3K}s + \frac{3K\tau^2}{4\mu+3K}\right]}{(\mu+3K)\left[s + \frac{3K\tau}{\mu+3K}\right]}$$

In equations (5.87), (5.88) and (5.89) we may employ the following relations between the moduli to simplify the expressions:

$$\frac{\mu+3K}{4\mu+3K} = \frac{1}{2(1+\nu)}; \quad \mu = \frac{E}{2(1+\nu)};$$

$$\frac{3K}{\mu+3K} = \frac{2}{3}(1+\nu); \quad \frac{3K}{4\mu+3K} = \frac{1+\nu}{3(1-\nu)};$$

$$\frac{2\mu+3K}{4\mu+3K} = \frac{2-\nu}{3(1-\nu)}; \quad \frac{9\mu K}{\mu+3K} = E$$

Thus we have that

$$D(s) = D \frac{s\left[s + \frac{2}{3}(1+\nu)\frac{1}{\tau}\right]}{s^2 + \frac{2(2-\nu)s}{3(1-\nu)\tau} + \frac{(1+\nu)}{3(1-\nu)\tau^2}}, \tag{5.90}$$

that

$$E(s) = E \frac{s}{s + \frac{2}{3}(1+\nu)\frac{1}{\tau}}, \tag{5.91}$$

and that

$$\lambda_o^4(s) = \frac{h\rho}{D} \frac{s^2 + \frac{2}{3}\left(\frac{2-\nu}{1-\nu}\right)\frac{s}{\tau} + \frac{1+\nu}{3(1-\nu)}\frac{1}{\tau^2}}{s + \frac{2}{3}(1+\nu)\frac{1}{\tau}} \frac{s^2 + \frac{2}{3}(1+\nu)\frac{s}{\tau} + \frac{E}{\rho R^2}}{s + \frac{2}{3}(1+\nu)\frac{1}{\tau}}. \tag{5.92}$$

Inspection of the form of the general solution shows that the stresses and displacements are largely composed of combinations of the following terms. First the argument of the Kelvin functions is given by

$$\lambda_o(i\omega)r = \left(\frac{\frac{R}{\tau}}{\sqrt{\frac{E}{\rho}}}\right)^{\frac{1}{2}}\left(\frac{r}{l}\right)\left\{\frac{\left[\frac{1+\nu}{3(1-\nu)} - (\tau\omega)^2\right]^2 + \frac{4}{9}\left(\frac{2-\nu}{1-\nu}\right)^2(\tau\omega)^2}{\left[\frac{4}{9}(1+\nu)^2 + (\tau\omega)^2\right]^2}\right.$$

$$\left.\left[\left(\frac{\sqrt{\frac{E}{\rho}}}{\frac{R}{\tau}}\right)^2 - (\tau\omega)^2\right]^2 + \frac{4}{9}(1+\nu)^2(\tau\omega)^2\right\}^{\frac{1}{8}} e^{i\frac{\psi_o}{4}}, \tag{5.93}$$

where

$$\psi_0 = \tan^{-1} \frac{\frac{2}{3}\left(\frac{2-\nu}{1-\nu}\right)^{\circ} \tau\omega}{\frac{1+\nu}{3(1-\nu)} - (\tau\omega)^2} - 2\tan^{-1} \frac{\tau\omega}{\frac{2}{3}(1+\nu)}$$

$$+ \tan^{-1} \frac{\frac{2}{3}(1+\nu)\tau\omega}{\left(\frac{\sqrt{\frac{E}{\rho}}}{\frac{R}{\tau}}\right)^2 - (\tau\omega)^2} . \qquad (5.94)$$

The coefficients of the Kelvin terms in the displacements and stresses contain the expressions

$$\frac{p}{2\rho h\left(s^2 + \frac{E(s)}{\rho R^2}\right)} = -\frac{1}{2\tau\omega}\frac{p}{E}\left(\frac{\sqrt{\frac{E}{\rho}}}{\frac{R}{\tau}}\right)^2 \frac{R^2}{h} \cdot$$

$$\left\{\frac{\frac{4}{9}(1+\nu)^2 + (\tau\omega)^2}{\left[(\tau\omega)^2 - \left(\frac{\sqrt{\frac{E}{\rho}}}{\frac{R}{\tau}}\right)^2\right]^2 + \frac{4}{9}(1+\nu)^2(\tau\omega)^2}\right\}^{\frac{1}{2}} e^{i\psi_1} , \qquad (5.95)$$

where

$$\psi_1 = \tan^{-1} \frac{\tau\omega}{\frac{2}{3}(1+\nu)} - \tan^{-1} \frac{(\tau\omega)^2 - \left(\frac{\sqrt{\frac{E}{\rho}}}{\frac{R}{\tau}}\right)^2}{\frac{2}{3}(1+\nu)\tau\omega} . \qquad (5.96)$$

On the next several pages we shall list the expressions thus obtained from the displacements and the derivatives of the stress function:

$$W(r, i\omega) = -\frac{1}{\tau\omega}\,\frac{p}{E}\,\frac{R}{h}^{2}\left(\frac{\sqrt{\frac{E}{\rho}}}{\frac{R}{\tau}}\right)^{2}$$

$$\mathrm{Re}\left\{\left\{\frac{\frac{4}{9}(1+\nu)^{2}+(\tau\omega)^{2}}{\left[(\tau\omega)^{2}-\left(\frac{\sqrt{\frac{E}{\rho}}}{\frac{R}{\tau}}\right)^{2}\right]^{2}+\frac{4}{9}(1+\nu)^{2}(\tau\omega)^{2}}\right\}^{\frac{1}{2}} e^{\,i\psi_{1}}\right.$$

$$\left.\left[1+\frac{A_{1}\alpha+B_{1}\beta}{\alpha^{2}+\beta^{2}}\right]\right\}, \qquad (5.97)$$

in ①

$$\frac{1}{r}\frac{\partial W(r,i\omega)}{\partial r} = -\frac{1}{\tau\omega}\,\frac{p}{E}\,\frac{R^{2}}{l^{2}h}\left(\frac{\sqrt{\frac{E}{\rho}}}{\frac{R}{\tau}}\right)^{2}\left(\frac{l}{r}\right)^{2}$$

$$\mathrm{Re}\left\{\left\{\frac{\frac{4}{9}(1+\nu)^{2}+(\tau\omega)^{2}}{\left[(\tau\omega)^{2}-\left(\frac{\sqrt{\frac{E}{\rho}}}{\frac{R}{\tau}}\right)^{2}\right]^{2}+\frac{4}{9}(1+\nu)^{2}(\tau\omega)^{2}}\right\}^{\frac{1}{2}} e^{\,i\psi_{1}}\right.$$

$$\left.\frac{r}{\alpha^{2}+\beta^{2}}\,\frac{\partial}{\partial r}\left[A_{1}(r)\alpha+B_{1}(r)\beta\right]\right\}, \qquad (5.98)$$

in ①

$$\nabla^{2}W(r,i\omega) = \frac{1}{\tau\omega}\,\frac{p}{E}\,\frac{R^{2}}{hl^{2}}\left(\frac{\sqrt{\frac{E}{\rho}}}{\frac{R}{\tau}}\right)$$

$$\mathrm{Re}\left\{\left\{\frac{\left[\frac{1+\nu}{3(1-\nu)}-(\tau\omega)^2\right]^2+\frac{4}{9}\left(\frac{2-\nu}{1-\nu}\right)^2(\tau\omega)^2}{\left[\frac{4}{9}(1+\nu)^2+(\tau\omega)^2\right]^2}\right\}^{\frac{1}{4}}\right.$$

$$\left\{\left[\left(\frac{\sqrt{\frac{E}{\rho}}}{\frac{R}{\tau}}\right)^2-(\tau\omega)^2\right]^2+\frac{4}{9}(1+\nu)^2(\tau\omega)^2\right\}$$

$$\left\{\frac{\frac{4}{9}(1+\nu)^2+(\tau\omega)^2}{\left[(\tau\omega)^2-\left(\frac{\sqrt{\frac{E}{\rho}}}{\frac{R}{\tau}}\right)^2\right]^2+\frac{4}{9}(1+\nu)^2(\tau\omega)^2}\right\}^{\frac{1}{2}}\cdot e^{i\left(\frac{\psi_2}{2}+\psi_1\right)}$$

$$\left.\frac{A_1(r)\beta-B_1(r)\alpha}{\alpha^2+\beta^2}\right\}, \qquad (5.99)$$

in (1)

where the equations (5.96) and (5.97) determine the moment resultants according to (5.80). The stress resultants are determined from the following derivatives of the Airy stress function:

$$\frac{1}{r}\frac{\partial F(r,i\omega)}{\partial r}=-\frac{\rho R}{\tau\omega}\left(\frac{1}{r}\right)^2\left(\frac{\sqrt{\frac{E}{\rho}}}{\frac{R}{\tau}}\right)^3$$

$$\mathrm{Re}\left\{\left\{\frac{\frac{4}{9}(1+\nu)^2+(\tau\omega)^2}{\left[(\tau\omega)^2-\left(\frac{\sqrt{\frac{E}{\rho}}}{\frac{R}{\tau}}\right)^2\right]^2+\frac{4}{9}(1+\nu)^2(\tau\omega)^2}\right\}^{\frac{1}{2}}\right.$$

$$\left\{\frac{\left[\frac{4}{9}(1+\nu)^2+(\tau\omega)^2\right]^2}{\left[\frac{1+\nu}{3(1-\nu)}-(\tau\omega)^2\right]^2+\frac{4}{9}\left(\frac{2-\nu}{1-\nu}\right)^2(\tau\omega)^2}\right\}^{\frac{1}{4}}$$

$$\left\{\left[\left(\frac{\sqrt{\frac{E}{\rho}}}{\frac{R}{\tau}}\right)^2-(\tau\omega)^2\right]^2+\frac{4}{9}(1+\nu)^2(\tau\omega)^2\right\}^{-\frac{1}{4}} e^{i(\psi_1-\frac{\psi_0}{2})}$$

$$\left\{\frac{1}{2}\left(\frac{\frac{R}{\tau}}{\sqrt{\frac{E}{\rho}}}\right)\left(\frac{r}{l}\right)^2\left\{\frac{\left[\frac{1+\nu}{3(1-\nu)}-(\tau\omega)^2\right]^2+\frac{4}{9}\left(\frac{2-\nu}{1-\nu}\right)^2(\tau\omega)^2}{\left[\frac{4}{9}(1+\nu)^2+(\tau\omega)^2\right]^2}\right.\right.$$

$$\left.\left.\left[\left[\left(\frac{\sqrt{\frac{E}{\rho}}}{\frac{R}{\tau}}\right)^2-(\tau\omega)^2\right]^2+\frac{4}{9}(1+\nu)^2(\tau\omega)^2\right]\right\}^{\frac{1}{4}} e^{i\frac{\psi_0}{2}}\right.$$

$$\left.+\frac{r}{\alpha^2+\beta^2}\frac{\partial}{\partial r}\left[A_1(r)\beta-B_1(r)\alpha\right]\right\}\Bigg), \quad \text{in } (1) \tag{5.100}$$

$$\nabla^2 F(r;i\omega) = -\frac{1}{\tau\omega}\rho R\left(\frac{\sqrt{\frac{E}{\rho}}}{\frac{R}{\tau}}\right)^2$$

$$Re\left\{\left\{\frac{\frac{4}{9}(1+\nu)^2+(\tau\omega)^2}{\left[(\tau\omega)^2-\left(\frac{\sqrt{\frac{E}{\rho}}}{\frac{R}{\tau}}\right)^2\right]^2+\frac{4}{9}(1+\nu)^2(\tau\omega)^2}\right\}^{\frac{1}{2}} e^{i\psi_1}\right.$$

$$\left.\left[1+\frac{A_1(r)\alpha+B_1(r)\beta}{\alpha^2+\beta^2}\right]\right\} \tag{5.101}$$

in (1)

In region (2) the corresponding expressions, presented in the same order as above, are

$$W(r,i\omega) = \frac{1}{\tau\omega}\,\frac{p}{E}\left(\frac{\sqrt{\frac{E}{\rho}}}{\frac{R}{\tau}}\right)^2\frac{R^2}{h}\,Re\left\{\frac{A_2(r)\alpha - B_2(r)\beta}{\alpha^2+\beta^2}\right.$$

$$\left.\left\{\frac{\frac{4}{9}(1+\nu)^2+(\tau\omega)^2}{\left[(\tau\omega)^2-\left(\frac{\sqrt{\frac{E}{\rho}}}{\frac{R}{\tau}}\right)^2\right]^2+\frac{4}{9}(1+\nu)^2(\tau\omega)^2}\right\}^{\frac{1}{2}} e^{i\psi_1}\right\}, \quad \text{in } (2) \tag{5.102}$$

$$\frac{1}{r}\,\frac{\partial W(r,i\omega)}{\partial r} = -\frac{1}{\tau\omega}\,\frac{p}{E}\left(\frac{\sqrt{\frac{E}{\rho}}}{\frac{R}{\tau}}\right)^2\frac{R^2}{l^2h}\left(\frac{1}{r}\right)^2$$

$$Re\left\{r\frac{\partial}{\partial r}\,\frac{A_2(r)\alpha - B_2(r)\beta}{\alpha^2+\beta^2}\right. \tag{5.103}$$

$$\left.\left\{\frac{\frac{4}{9}(1+\nu)^2+(\tau\omega)^2}{\left[(\tau\omega)^2-\left(\frac{\sqrt{\frac{E}{\rho}}}{\frac{R}{\tau}}\right)^2\right]^2+\frac{4}{9}(1+\nu)^2(\tau\omega)^2}\right\}^{\frac{1}{2}} e^{i\psi_1}\right\}, \quad \text{in } (2)$$

$$\nabla^2 W(r,i\omega) = -\frac{1}{\tau\omega}\,\frac{p}{E}\,\frac{R^2}{l^2h}\left(\frac{\sqrt{\frac{E}{\rho}}}{\frac{R}{\tau}}\right)$$

$$Re\left\{\frac{A_2(r)\beta + B_2(r)\alpha}{\alpha^2+\beta^2}\right.$$

$$\left\{ \frac{\frac{4}{9}(1+\nu)^2 + (\tau\omega)^2}{\left[(\tau\omega)^2 + \left(\frac{\sqrt{\frac{E}{\rho}}}{\frac{R}{\tau}}\right)^2\right]^2 + \frac{4}{9}(1+\nu)^2(\tau\omega)^2} \right\}^{\frac{1}{2}}$$

(5.104)

$$\left\{ \frac{\left[\frac{1+\nu}{3(1-\nu)} - (\tau\omega)^2\right]^2 + \frac{4}{9}\left(\frac{2-\nu}{1-\nu}\right)^2(\tau\omega)^2}{\left[\frac{4}{9}(1+\nu)^2 + (\tau\omega)^2\right]^2} \right\}^{\frac{1}{4}}$$

$$\left\{ \left[\left(\frac{\sqrt{\frac{E}{\rho}}}{\frac{R}{\tau}}\right)^2 - (\tau\omega)^2\right]^2 + \frac{4}{9}(1+\nu)^2(\tau\omega)^2 \right\}^{\frac{1}{4}} e^{i\left(\frac{\psi_0}{2} + \psi_1\right)} \Bigg)$$

in ②

$$\frac{1}{r}\frac{\partial F(r;\omega)}{\partial r} = -\frac{p R}{\tau\omega}\left(\frac{1}{r}\right)^2\left(\frac{\sqrt{\frac{E}{\rho}}}{\frac{R}{\tau}}\right)^3$$

$$Re\left\{ \left\{ \frac{\frac{4}{9}(1+\nu)^2 + (\tau\omega)^2}{\left[(\tau\omega)^2 - \left(\frac{\sqrt{\frac{E}{\rho}}}{\frac{R}{\tau}}\right)^2\right]^2 + \frac{4}{9}(1+\nu)^2(\tau\omega)^2} \right\}^{\frac{1}{2}} \right.$$

$$\left\{ \frac{\left[\frac{4}{9}(1+\nu)^2 + (\tau\omega)^2\right]^2}{\left[\frac{1+\nu}{3(1-\nu)} - (\tau\omega)^2\right] + \frac{4}{9}\left(\frac{2-\nu}{1-\nu}\right)^2(\tau\omega)^2} \right\}^{\frac{1}{4}} \left\{ \left[\left(\frac{\sqrt{\frac{E}{\rho}}}{\frac{R}{\tau}}\right)^2 - (\tau\omega)^2\right]^2 \right.$$

$$\left. + \frac{4}{9}(1+\nu)^2(\tau\omega)^2 \right\}^{-\frac{1}{4}} e^{i\left(\frac{\psi_0}{2} + \psi_1\right)} \left[\left(\frac{\frac{R}{\tau}}{\sqrt{\frac{E}{\rho}}}\right)\left(\frac{a}{l}\right)^2 \right.$$

$$\left. \left\{ \frac{\left[\frac{1+\nu}{3(1-\nu)} - (\tau\omega)^2\right]^2 + \frac{4}{9}\left(\frac{2-\nu}{1-\nu}\right)^2(\tau\omega)^2}{\left[\frac{4}{9}(1+\nu)^2 + (\tau\omega)^2\right]^2} \right\}^{\frac{1}{4}} \right.$$

$$\left\{\left[\left(\frac{\sqrt{\frac{E}{\rho}}}{\frac{R}{T}}\right)^2-(T\omega)^2\right]^2+\frac{4}{9}(1+\nu)^2(T\omega)^2\right\}^{\frac{1}{4}} e^{i\frac{\psi}{2}} \quad (5.105)$$

$$-\frac{r}{\alpha^2+\beta^2}\frac{\partial}{\partial r}\left[A_2(r)\beta+B_2(r)\alpha\right]\Bigg]\Bigg)\cdot \text{in (2)}$$

$$\nabla^2 F(r,i\omega)=\frac{\rho}{T\omega}\left(\frac{\sqrt{\frac{E}{\rho}}}{\frac{R}{T}}\right)^2 Re\left\{\frac{A_2(r)\alpha-B_2(r)\beta}{\alpha^2+\beta^2}\right.$$

$$\left.\left\{\frac{\frac{4}{9}(1+\nu)^2+(T\omega)^2}{\left[(T\omega)^2-\left(\frac{\sqrt{\frac{E}{\rho}}}{\frac{R}{T}}\right)^2\right]^2+\frac{4}{9}(1+\nu)^2(T\omega)^2}\right\}^{\frac{1}{2}} e^{i\psi_1}\right\}. \quad (5.106)$$

in ②.

9. The Viscoelastic Steady State--Kelvin Materials

The Kelvin material is characterised by the following choice of $P_k(s)$

$$P_1(s)=1, \qquad P_3(s)=sT,$$

$$P_2(s)=2\mu(Ts+1), \qquad P_4(s)=3KsT$$

Substitution of these expressions into the general operator analogues of the elastic moduli D and E gives, for the compressible Kelvin material

$$D(s)=\frac{h^3\mu}{3}(Ts+1)\,\frac{\mu Ts+(\mu+3K)}{4\mu Ts+(4\mu+3K)}, \quad (5.107)$$

$$E(s) = \frac{9\mu K(\tau s + 1)}{\mu\tau s + (\mu + 3K)},$$

$$\lambda_o^4(s) = \frac{3}{\mu h^2} \frac{4\mu\left[\tau s + \frac{4\mu + 3K}{4\mu}\right]}{\mu\left[\tau s + \frac{\mu + 3K}{\mu}\right](\tau s + 1)} \tag{5.108}$$

$$\rho\left[s^2 + \frac{9\mu K}{\rho R^2} \frac{(\tau s + 1)}{\left(\tau s + \frac{\mu + 3K}{\mu}\right)}\right], \tag{5.109}$$

which may be simplified by using the relations that were given on p. 155 in addition to

$$\frac{\mu}{\mu + 3K} = \frac{1 - 2\nu}{3} \; ; \quad \frac{4\mu}{4\mu + 3K} = \frac{2(1 - 2\nu)}{3(1 - \nu)}.$$

We have, accordingly, that

$$D(s) = D(s\tau + 1) \frac{\frac{1 - 2\nu}{3}\tau s + 1}{\frac{2(1 - 2\nu)}{3(1 - \nu)}\tau s + 1}, \tag{5.110}$$

and that

$$E(s) = E \frac{s\tau + 1}{\frac{1 - 2\nu}{3}s\tau + 1}, \tag{5.111}$$

and finally that

$$\lambda_o^4(s) = \frac{24\rho(1+\nu)}{Eh^2} \frac{\tau s + \frac{3(1-\nu)}{2(1-2\nu)}}{(\tau s + \frac{3}{1-2\nu})(\tau s + 1)}$$

$$\frac{\tau s^3 + \frac{3s^2}{1-2\nu} + \frac{3E\cdot\tau s}{\rho R^2(1-2\nu)} + \frac{3E}{\rho R^2(1-2\nu)}}{\tau s + \frac{3}{1-2\nu}} . \qquad (5.112)$$

We shall, as in the previous case of the Maxwell material, now record the displacements, their pertinent derivatives, and the necessary derivatives of the stress function. In the inner, or loaded, region

$$w(r;i\omega) = \frac{p}{E}\frac{R^2}{h}\left(\frac{\sqrt{\frac{E}{\rho}}}{\frac{R}{\tau}}\right)^2 Re\left\{\left[1 + \frac{A_1(r)\alpha + B_1(r)\beta}{\alpha^2+\beta^2}\right]\right.$$

$$\left.\left\{\frac{\left(\frac{3}{1-2\nu}\right)^2 + (\tau\omega)^2}{\left(\frac{3}{1-2\nu}\right)^2\left[\left(\frac{\sqrt{\frac{E}{\rho}}}{\frac{R}{\tau}}\right)^2 - (\tau\omega)^2\right] + (\tau\omega)^2\left[\frac{3}{1-2\nu}\left(\frac{\sqrt{\frac{E}{\rho}}}{\frac{R}{\tau}}\right)^2 - (\tau\omega)^2\right]^2}\right\}^{\frac{1}{2}} e^{-i\psi_3}\right\}, \qquad (5.113)$$

in (1)

$$\frac{1}{r}\frac{\partial w(r;i\omega}{\partial r} = \frac{p}{E}\frac{R^2}{hl^2}\left(\frac{1}{r}\right)^2\left(\frac{\sqrt{\frac{E}{\rho}}}{\frac{R}{\tau}}\right)^2$$

$$Re\left\{\frac{r}{\alpha^2+\beta^2}\frac{\partial}{\partial r}\left[A_1(r)\alpha + B_1(r)\beta\right]\right.$$

$$\left\{ \frac{\left(\frac{3}{1-2\nu}\right)^2 + (\tau\omega)^2}{\left(\frac{3}{1-2\nu}\right)^2\left[\left(\frac{\sqrt{\frac{E}{\rho}}}{\frac{R}{T}}\right)^2 - (\tau\omega)^2\right]^2 + (\tau\omega)^2\left[\frac{3}{1-2\nu}\left(\frac{\sqrt{\frac{E}{\rho}}}{\frac{R}{T}}\right)^2 - (\tau\omega)^2\right]} \right\}^{\frac{1}{2}}$$

$$e^{-i\psi_3} \Bigg\}, \qquad (5.114)$$

in (1)

$$\nabla^2 w(r, i\omega) = -\frac{p}{E}\left(\frac{R}{l}\right)^2 \frac{1}{h}\left(\frac{2}{1-\nu}\right)^{\frac{1}{2}}\left(\frac{\sqrt{\frac{E}{\rho}}}{\frac{R}{T}}\right)$$

$$\mathrm{Re}\left\{\left\{ \frac{\left(\frac{3}{1-2\nu}\right)^2 + (\tau\omega)^2}{\left(\frac{3}{1-2\nu}\right)^2\left[\left(\frac{\sqrt{\frac{E}{\rho}}}{\frac{R}{T}}\right)^2 - (\tau\omega)^2\right]^2 + (\tau\omega)^2\left[\frac{3}{1-2\nu}\left(\frac{\sqrt{\frac{E}{\rho}}}{\frac{R}{T}}\right)^2 - (\tau\omega)^2\right]^2} \right\}^{\frac{1}{2}}\right.$$

$$\left\{ \frac{\left[\frac{3(1-\nu)}{2(1-2\nu)}\right]^2 + (\tau\omega)^2}{\left[\left(\frac{3}{1-2\nu}\right)^2 + (\tau\omega)^2\right]^2\left[1 + (\tau\omega)^2\right]} \left[\left(\frac{3}{1-2\nu}\right)^2\left[\left(\frac{\sqrt{\frac{E}{\rho}}}{\frac{R}{T}}\right)^2 - (\tau\omega)^2\right]^2\right.\right.$$

$$\left.\left. + (\tau\omega)^2\left[\frac{3}{1-2\nu}\left(\frac{\sqrt{\frac{E}{\rho}}}{\frac{R}{T}}\right)^2 - (\tau\omega)^2\right]^2\right]\right\}^{\frac{1}{4}} e^{i\left(\frac{\psi_2}{2} + \psi_3\right)}$$

$$\left.\left\{\left[\frac{-A_1(r)\beta + B_1(r)}{\alpha^2 + \beta^2}\right]\right\}\right), \qquad (5.115)$$

in (1)

$$\frac{1}{r}\frac{\partial F(r,i\omega}{\partial r} = \rho R\left(\frac{\sqrt{\frac{E}{\rho}}}{\frac{R}{\tau}}\right)^3\left(\frac{1-\nu}{2}\right)^{\frac{1}{2}}\left(\frac{1}{r}\right)^2$$

$$Re\left\{\left\{\frac{\left[\frac{3(1-\nu)}{2(1-2\nu)}\right]^2+(\tau\omega)^2}{\left[\left(\frac{3}{1-2\nu}\right)^2+(\tau\omega)^2\right]^2\left[1+(\tau\omega)^2\right]}\right\}^{-\frac{1}{4}}\left\{\left(\frac{3}{1-2\nu}\right)^2\left[\left(\frac{\sqrt{\frac{E}{\rho}}}{\frac{R}{\tau}}\right)^2-(\tau\omega)^2\right]^2\right.\right.$$

$$\left.\left.+(\tau\omega)^2\left[\frac{3}{1-2\nu}\left(\frac{\sqrt{\frac{E}{\rho}}}{\frac{R}{\tau}}\right)^2-(\tau\omega)^2\right]^2\right\}^{-\frac{1}{4}} e^{-i\left(\frac{\psi_2}{2}+\psi_3\right)}\right.$$

$$\left\{\left(\frac{2}{1-\nu}\right)^{\frac{1}{2}}\left(\frac{\frac{R}{\tau}}{\sqrt{\frac{E}{\rho}}}\right)^2\left(\frac{r}{l}\right)^2\left[\frac{\left[\frac{3(1-\nu)}{2(1-2\nu)}\right]^2+(\tau\omega)^2}{\left[\left(\frac{3}{1-2\nu}\right)^2+(\tau\omega)^2\right]^2\left[1+(\tau\omega)^2\right]}\right.\right.$$

$$\left.\left.\left[\left(\frac{3}{1-2\nu}\right)^2\left[\left(\frac{\sqrt{\frac{E}{\rho}}}{\frac{R}{\tau}}\right)^2-(\tau\omega)^2\right]^2+(\tau\omega)^2\left[\frac{3}{1-2\nu}\left(\frac{\sqrt{\frac{E}{\rho}}}{\frac{R}{\tau}}\right)^2-(\tau\omega)^2\right]^2\right]\right]^{\frac{1}{4}}$$

$$\left\{\frac{\left(\frac{3}{1-2\nu}\right)^2\left[\left(\frac{\sqrt{\frac{E}{\rho}}}{\frac{R}{\tau}}\right)^2-(\tau\omega)^2\right]+(\tau\omega)^2\left[\frac{3}{1-2\nu}\left(\frac{\sqrt{\frac{E}{\rho}}}{\frac{R}{\tau}}\right)^2-(\tau\omega)^2\right]^2}{\left(\frac{3}{1-2\nu}\right)^2+(\tau\omega)^2}\right\}^{-\frac{1}{2}}$$

(5.116)

$$e^{i\frac{\psi_2}{2}}\frac{r}{\alpha^2+\beta^2}\frac{\partial}{\partial r}\left[A_1(r)\beta - B_1(r)\alpha\right]\Big\}, \text{ in } \textcircled{1}$$

$$\nabla^2 F(r,i\omega) = \rho R\left(\frac{\sqrt{\frac{E}{\rho}}}{\frac{R}{\tau}}\right)^2 Re\left\{\left[1+\frac{A_1(r)\alpha+B_1(r)\beta}{\alpha^2+\beta^2}\right]\right.$$

$$\left\{\frac{\left(\frac{3}{1-2\nu}\right)^2+(\tau\omega)^2}{\left(\frac{3}{1-2\nu}\right)^2\left[\left(\frac{\sqrt{\frac{E}{\rho}}}{\frac{R}{\tau}}\right)^2-(\tau\omega)^2\right]^2+(\tau\omega)^2\left[\frac{3}{1-2\nu}\left(\frac{\sqrt{\frac{E}{\rho}}}{\frac{R}{\tau}}\right)^2-(\tau\omega)^2\right]^2}\right\}^{\frac{1}{2}} e^{-i\psi_3}\Bigg), \quad (5.117)$$

in ①

In region (2) the corresponding expressions are recorded below in the same order as the ones preceeding:

$$W(r,i\omega) = -\frac{p}{E}\frac{R^2}{h}\left(\frac{\sqrt{\frac{E}{\rho}}}{\frac{R}{\tau}}\right)^2 Re\Bigg\{\frac{A_2(r)\alpha - B_2(r)\beta}{\alpha^2+\beta^2}$$

$$\left\{\frac{\left(\frac{3}{1-2\nu}\right)^2+(\tau\omega)^2}{\left(\frac{3}{1-2\nu}\right)^2\left[\left(\frac{\sqrt{\frac{E}{\rho}}}{\frac{R}{\tau}}\right)^2-(\tau\omega)^2\right]^2+(\tau\omega)^2\left[\frac{3}{1-2\nu}\left(\frac{\sqrt{\frac{E}{\rho}}}{\frac{R}{\tau}}\right)^2-(\tau\omega)^2\right]^2}\right\}^{\frac{1}{2}} e^{-i\psi_3}\Bigg\}, \quad (5.118)$$

in ②

$$\frac{1}{r}\frac{\partial W(r,i\omega)}{\partial r} = -\frac{p}{E}\frac{R^2}{hl^2}\left(\frac{l}{r}\right)^2\left(\frac{\sqrt{\frac{E}{\rho}}}{\frac{R}{\tau}}\right)^2 Re\Bigg\{e^{-i\psi_3}$$

$$\left\{\frac{\left(\frac{3}{1-2\nu}\right)^2+(\tau\omega)^2}{\left(\frac{3}{1-2\nu}\right)^2\left[\left(\frac{\sqrt{\frac{E}{\rho}}}{\frac{R}{\tau}}\right)^2-(\tau\omega)^2\right]^2+(\tau\omega)^2\left[\frac{3}{1-2\nu}\left(\frac{\sqrt{\frac{E}{\rho}}}{\frac{R}{\tau}}\right)^2-(\tau\omega)^2\right]^2}\right\}^{\frac{1}{2}}$$

$$\frac{r}{\alpha^2+\beta^2}\frac{\partial}{\partial r}\left[A_2(r)\alpha - B_2(r)\beta\right]\Bigg\}, \quad (5.119)$$

in ②

$$\nabla^2 w(r,i\omega) = -\frac{p}{E}\frac{R^2}{hl^2}\left(\frac{\sqrt{\frac{E}{\rho}}}{\frac{R}{T}}\right)\left(\frac{2}{1-\nu}\right)^{\frac{1}{2}} Re\left\{\frac{A_2(r)\beta + B_2(r)\alpha}{\alpha^2+\beta^2}\right.$$

$$\left\{\frac{\left(\frac{3}{1-2\nu}\right)^2 + (T\omega)^2}{\left(\frac{3}{1-2\nu}\right)^2\left[\left(\frac{\sqrt{\frac{E}{\rho}}}{\frac{R}{T}}\right)^2 - (T\omega)^2\right]^2 + (T\omega)^2\left[\frac{3}{1-2\nu}\left(\frac{\sqrt{\frac{E}{\rho}}}{\frac{R}{T}}\right)^2 - (T\omega)^2\right]}\right\}^{\frac{1}{2}}$$

$$\left\{\frac{\left[\frac{3(1-\nu)}{2(1-2\nu)}\right]^2 + (T\omega)^2}{\left[\left(\frac{3}{1-2\nu}\right)^2 + (T\omega)^2\right]^2\left[1+(T\omega)^2\right]}\left[\left(\frac{3}{1-2\nu}\right)^2\left[\left(\frac{\sqrt{\frac{E}{\rho}}}{\frac{R}{T}}\right)^2 - (T\omega)^2\right]^2\right.\right.$$

$$\left.\left.\left. + (T\omega)^2\left[\frac{3}{1-2\nu}\left(\frac{\sqrt{\frac{E}{\rho}}}{\frac{R}{T}}\right)^2 - (T\omega)^2\right]^2\right]\right\}^{\frac{1}{4}} e^{i\left(\frac{\psi_0}{2}+\psi_3\right)}\Bigg\}, \quad (5.120)$$

in (2)

$$\frac{1}{r}\frac{\partial F(r,i\omega)}{\partial r} = p R\left(\frac{\sqrt{\frac{E}{\rho}}}{\frac{R}{T}}\right)^3\left(\frac{1-\nu}{2}\right)^{\frac{1}{2}}\left(\frac{1}{r}\right)^2$$

$$Re\left\{\left\{\frac{\left(\frac{3}{1-2\nu}\right)^2 + (T\omega)^2}{\left(\frac{3}{1-2\nu}\right)^2\left[\left(\frac{\sqrt{\frac{E}{\rho}}}{\frac{R}{T}}\right)^2 - (T\omega)^2\right]^2 + (T\omega)^2\left[\frac{3}{1-2\nu}\left(\frac{\sqrt{\frac{E}{\rho}}}{\frac{R}{T}}\right)^2 - (T\omega)^2\right]^2}\right\}^{\frac{1}{2}}\right.$$

$$\left\{\frac{\left[\frac{3(1-\nu)}{2(1-2\nu)}\right]^2 +}{\left[\left(\frac{3}{1-2\nu}\right)^2 + (T\omega)^2\right]\left[1+(T\omega)^2\right]}\right\}^{-\frac{1}{4}}\left\{\left(\frac{3}{1-2\nu}\right)^2\left[\left(\frac{\sqrt{\frac{E}{\rho}}}{\frac{R}{T}}\right)^2 - (T\omega)^2\right]^2\right.$$

$$\left[\left(\frac{3}{1-2\nu}\right)^2\left[\left(\frac{\sqrt{\frac{E}{\rho}}}{\frac{R}{\tau}}\right)^2-(\tau\omega)^2\right]^2+(\tau\omega)^2\left[\frac{3}{1-2\nu}\left(\frac{\sqrt{\frac{E}{\rho}}}{\frac{R}{\tau}}\right)^2-(\tau\omega)^2\right]^2\right]^{\frac{1}{4}}$$

$$\cdot e^{i\frac{\psi_2}{2}}-\frac{r}{\alpha^2+\beta^2}\frac{\partial}{\partial r}\left[A_2(r)\beta+B_2(r)\alpha\right]\Bigg\}, \quad \text{in } (2) \tag{5.121}$$

$$\nabla^2 F(r,i\omega)=-\rho R\left(\frac{\sqrt{\frac{E}{\rho}}}{\frac{R}{\tau}}\right)^2 Re\left\{\frac{A_2(r)\alpha-B_2(r)\beta}{\alpha^2+\beta^2}\right.$$

$$\left.\left\{\frac{\left(\frac{3}{1-2\nu}\right)^2+(\tau\omega)^2}{\left(\frac{3}{1-2\nu}\right)^2\left[\left(\frac{\sqrt{\frac{E}{\rho}}}{\frac{R}{\tau}}\right)^2-(\tau\omega)^2\right]^2+(\tau\omega)^2\left[\frac{3}{1-2\nu}\left(\frac{\sqrt{\frac{E}{\rho}}}{\frac{R}{\tau}}\right)^2-(\tau\omega)^2\right]^2}\right\}^{\frac{1}{2}} e^{i\psi_3}\right\}. \tag{5.122}$$

in (2)

In the above formulas the quantities ψ_2 and ψ_3 are defined to be

$$\psi_2=\tan^{-1}\frac{\tau\omega}{\left[\frac{3(1-\nu)}{2(1-2\nu)}\right]}-2\tan^{-1}\frac{\tau\omega}{\left(\frac{3}{1-2\nu}\right)}-\tan^{-1}\tau\omega$$

$$+\tan^{-1}\left\{\tau\omega\left[\frac{3}{1-2\nu}\left(\frac{\sqrt{\frac{E}{\rho}}}{\frac{R}{\tau}}\right)^2-(\tau\omega)^2\right]\left\{\frac{3}{1-2\nu}\left[\left(\frac{\sqrt{\frac{E}{\rho}}}{\frac{R}{\tau}}\right)^2-(\tau\omega)^2\right]\right\}^{-1}\right\}, \tag{5.123}$$

$$\psi_3=\psi_2-\tan^{-1}\frac{\tau\omega}{\left[\frac{3(1-\nu)}{2(1-2\nu)}\right]}+\tan^{-1}\frac{\tau\omega}{\left(\frac{3}{1-2\nu}\right)}$$

$$+\tan^{-1}\tau\omega. \tag{5.124}$$

10. Presentation of Results The displacements for the Maxwell material in both frequency ranges is shown in figure 11. The elastic displacement for these ranges and the steady state as well is shown on the same graph for comparison. The elastic steady state and low frequency curves agree with Reissner [41] . The Kelvin displacement for both frequency ranges is shown in figure 12.

Figures 13 and 14 show the membrane and bending stresses, respectively, for the Maxwell shell; their Kelvin counterparts are given in figures 15 and 16. Elastic membrane and bending stresses are found in figures 17, 18 and 19 for the static, low and high frequencies respectively. In all cases the stresses are small, but not zero, at the origin.

In figures 11 through 18 the shell is subjected to a uniformly distributed load over a centrally located circular area of radius given approximately by $\frac{a}{l} = 0.257$. In the computation the last place in the $\frac{a}{l}$ value as altered to eliminate tedious interpolation.

11. Discussion of Results for the Steady State There are two interesting features of the steady state results. The first is the difference between the displacement and the difference between the stresses for the two frequency ranges in the case of the Maxwell material. The second is that a corresponding change is not bo be found in the Kelvin material. The explanation of both is dependent upon the natures of

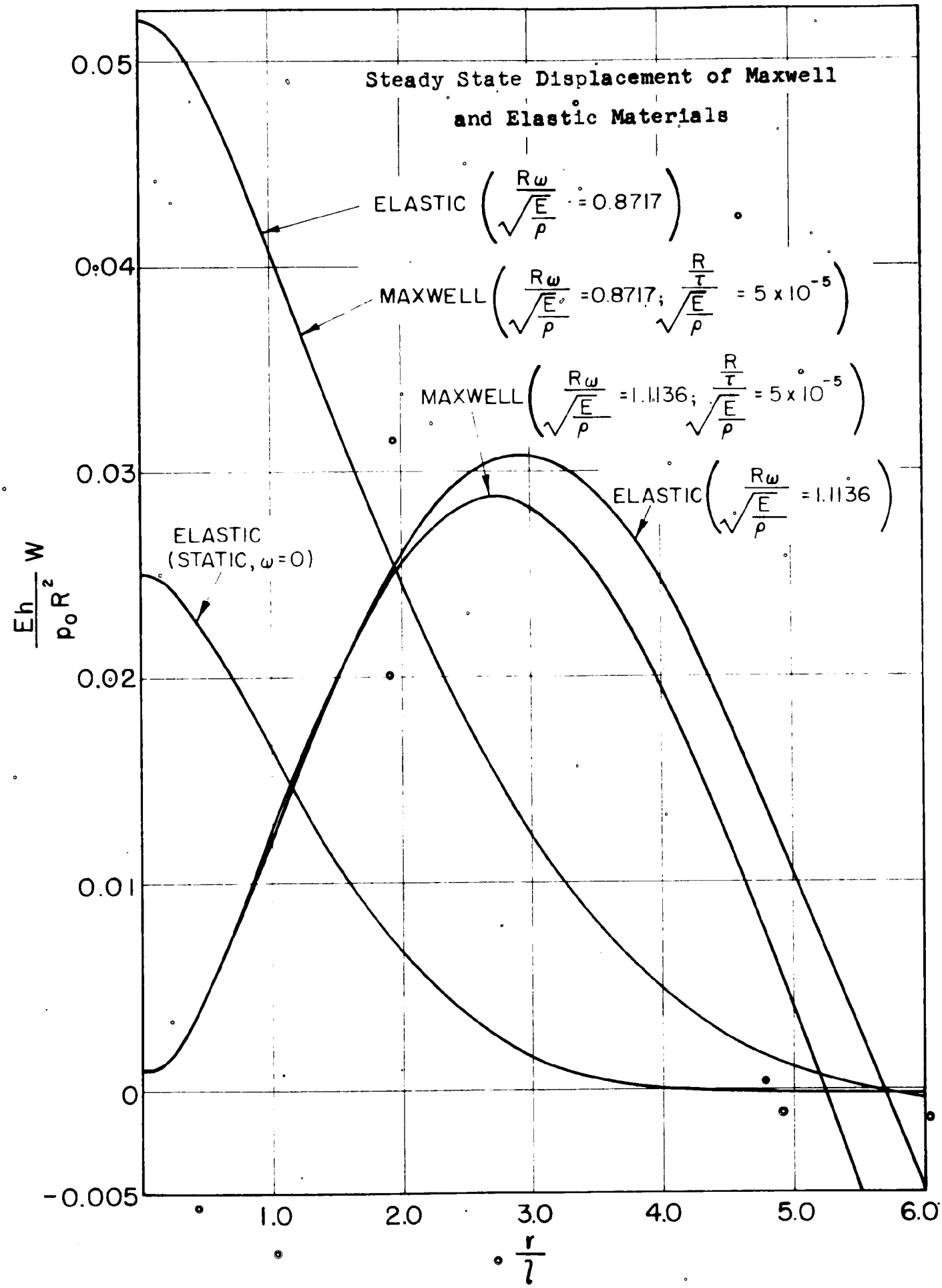
Steady State Displacement of Maxwell and Elastic Materials
ELASTIC $\left(\frac{R\omega}{\sqrt{\frac{E}{\rho}}} = 0.8717\right)$
MAXWELL $\left(\frac{R\omega}{\sqrt{\frac{E}{\rho}}} = 0.8717;\ \frac{\frac{R}{\tau}}{\sqrt{\frac{E}{\rho}}} = 5 \times 10^{-5}\right)$
MAXWELL $\left(\frac{R\omega}{\sqrt{\frac{E}{\rho}}} = 1.1136;\ \frac{\frac{R}{\tau}}{\sqrt{\frac{E}{\rho}}} = 5 \times 10^{-5}\right)$
ELASTIC $\left(\frac{R\omega}{\sqrt{\frac{E}{\rho}}} = 1.1136\right)$
ELASTIC (STATIC, $\omega = 0$)
$\frac{Eh}{p_0 R^2} W$
0.05
0.04
0.03
0.02
0.01
0
-0.005
1.0
2.0
3.0
4.0
5.0
6.0
$\frac{r}{l}$

Figure 11

Steady State Displacement of a Kelvin Material

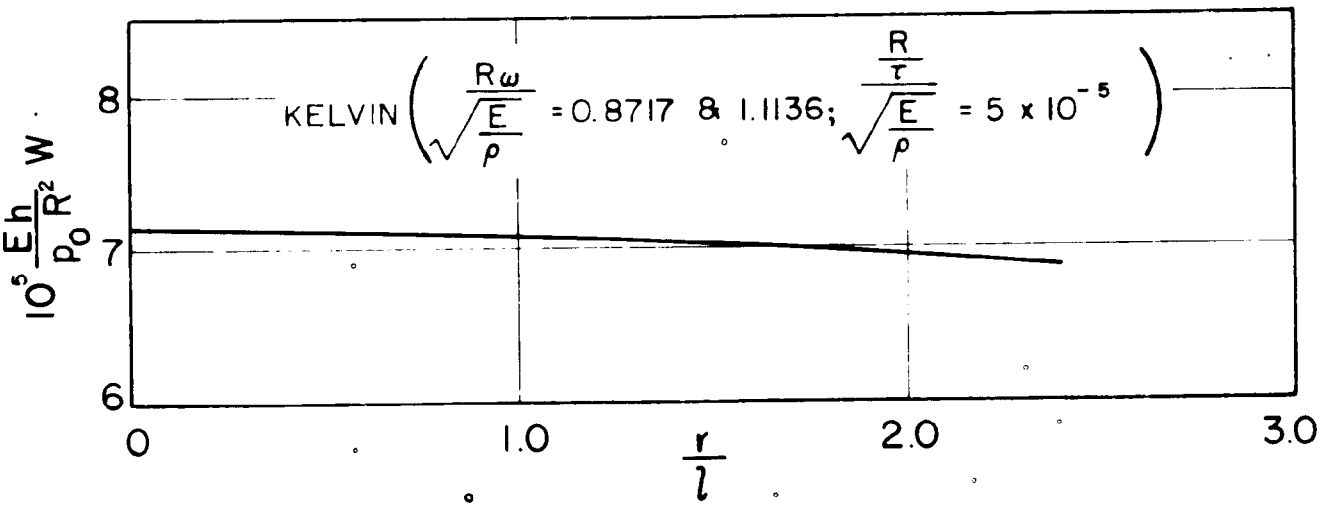

Figure 12

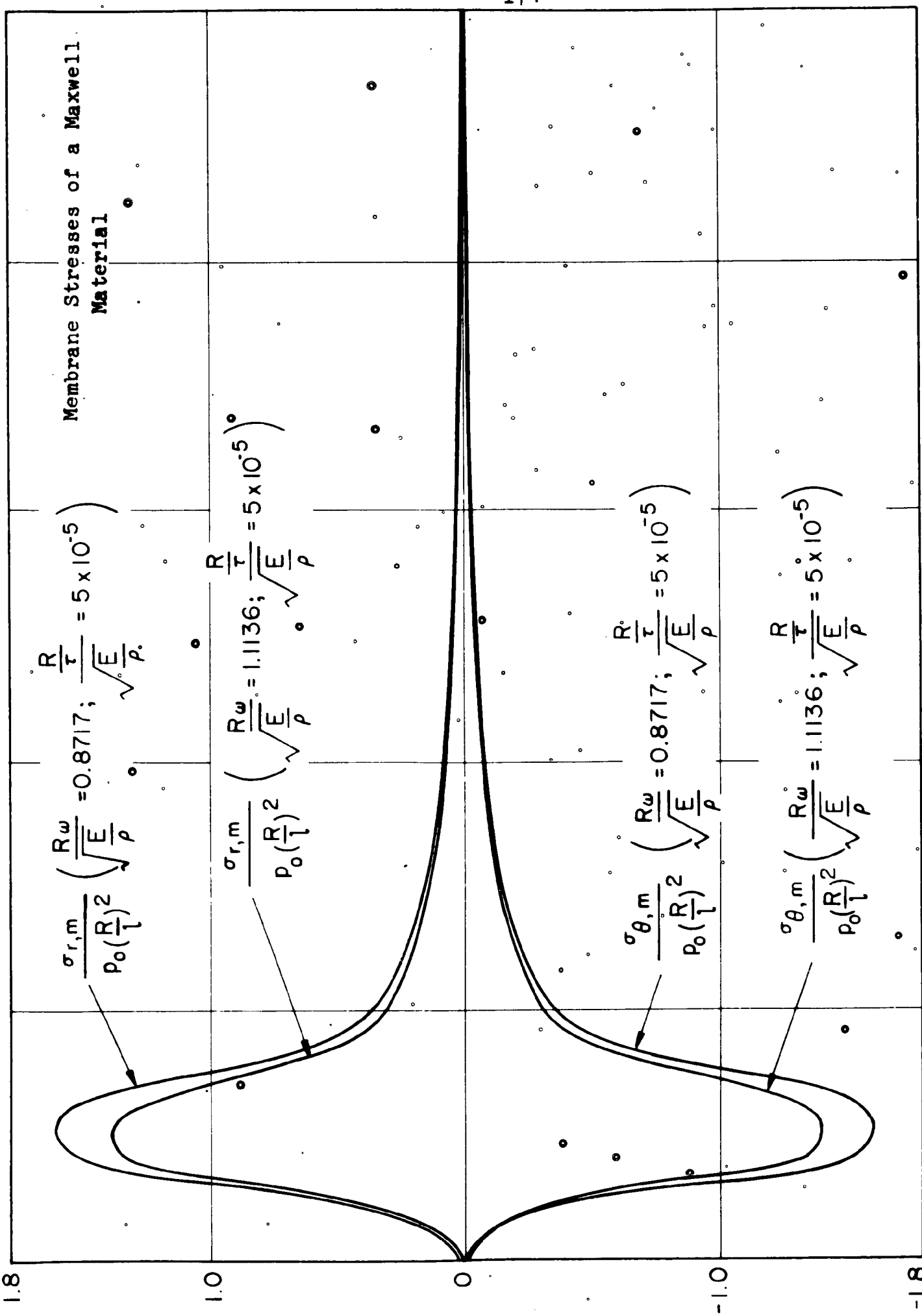
Membrane Stresses of a Maxwell Material
$\frac{\sigma_{r,m}}{p_0(\frac{R}{l})^2}\left(\sqrt{\frac{E}{\rho}}\frac{R\omega}{}=0.8717;\ \frac{R}{\tau}\sqrt{\frac{E}{\rho}}=5\times10^{-5}\right)$
$\frac{\sigma_{r,m}}{p_0(\frac{R}{l})^2}\left(\sqrt{\frac{E}{\rho}}\frac{R\omega}{}=1.1136;\ \frac{R}{\tau}\sqrt{\frac{E}{\rho}}=5\times10^{-5}\right)$
$\frac{\sigma_{\theta,m}}{p_0(\frac{R}{l})^2}\left(\sqrt{\frac{E}{\rho}}\frac{R\omega}{}=0.8717;\ \frac{R}{\tau}\sqrt{\frac{E}{\rho}}=5\times10^{-5}\right)$
$\frac{\sigma_{\theta,m}}{p_0(\frac{R}{l})^2}\left(\sqrt{\frac{E}{\rho}}\frac{R\omega}{}=1.1136;\ \frac{R}{\tau}\sqrt{\frac{E}{\rho}}=5\times10^{-5}\right)$
1.8
1.0
0
-1.0
-1.8
0
0.5
1.0
1.5
2.0
2.5
$\frac{r}{l}$

Figure 13

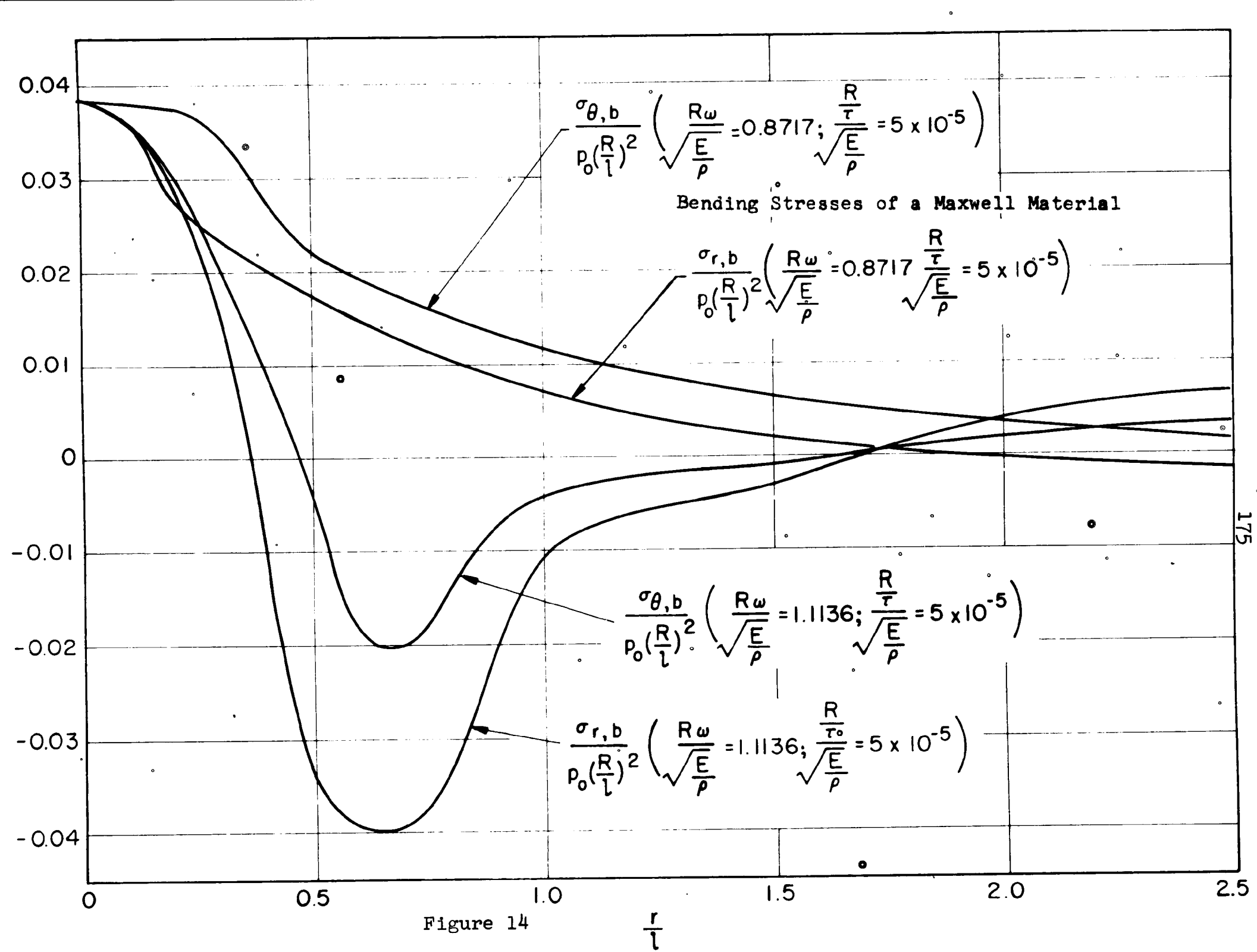
0.04
0.03
0.02
0.01
0
-0.01
-0.02
-0.03
-0.04
0
0.5
1.0
1.5
2.0
2.5
$\frac{r}{l}$
$\frac{\sigma_{\theta,b}}{p_0(\frac{R}{l})^2}\left(\frac{R\omega}{\sqrt{\frac{E}{\rho}}}=0.8717;\ \frac{\frac{R}{\tau}}{\sqrt{\frac{E}{\rho}}}=5\times10^{-5}\right)$
Bending Stresses of a Maxwell Material
$\frac{\sigma_{r,b}}{p_0(\frac{R}{l})^2}\left(\frac{R\omega}{\sqrt{\frac{E}{\rho}}}=0.8717\ \frac{\frac{R}{\tau}}{\sqrt{\frac{E}{\rho}}}=5\times10^{-5}\right)$
$\frac{\sigma_{\theta,b}}{p_0(\frac{R}{l})^2}\left(\frac{R\omega}{\sqrt{\frac{E}{\rho}}}=1.1136;\ \frac{\frac{R}{\tau}}{\sqrt{\frac{E}{\rho}}}=5\times10^{-5}\right)$
$\frac{\sigma_{r,b}}{p_0(\frac{R}{l})^2}\left(\frac{R\omega}{\sqrt{\frac{E}{\rho}}}=1.1136;\ \frac{\frac{R}{\tau_0}}{\sqrt{\frac{E}{\rho}}}=5\times10^{-5}\right)$

Figure 14

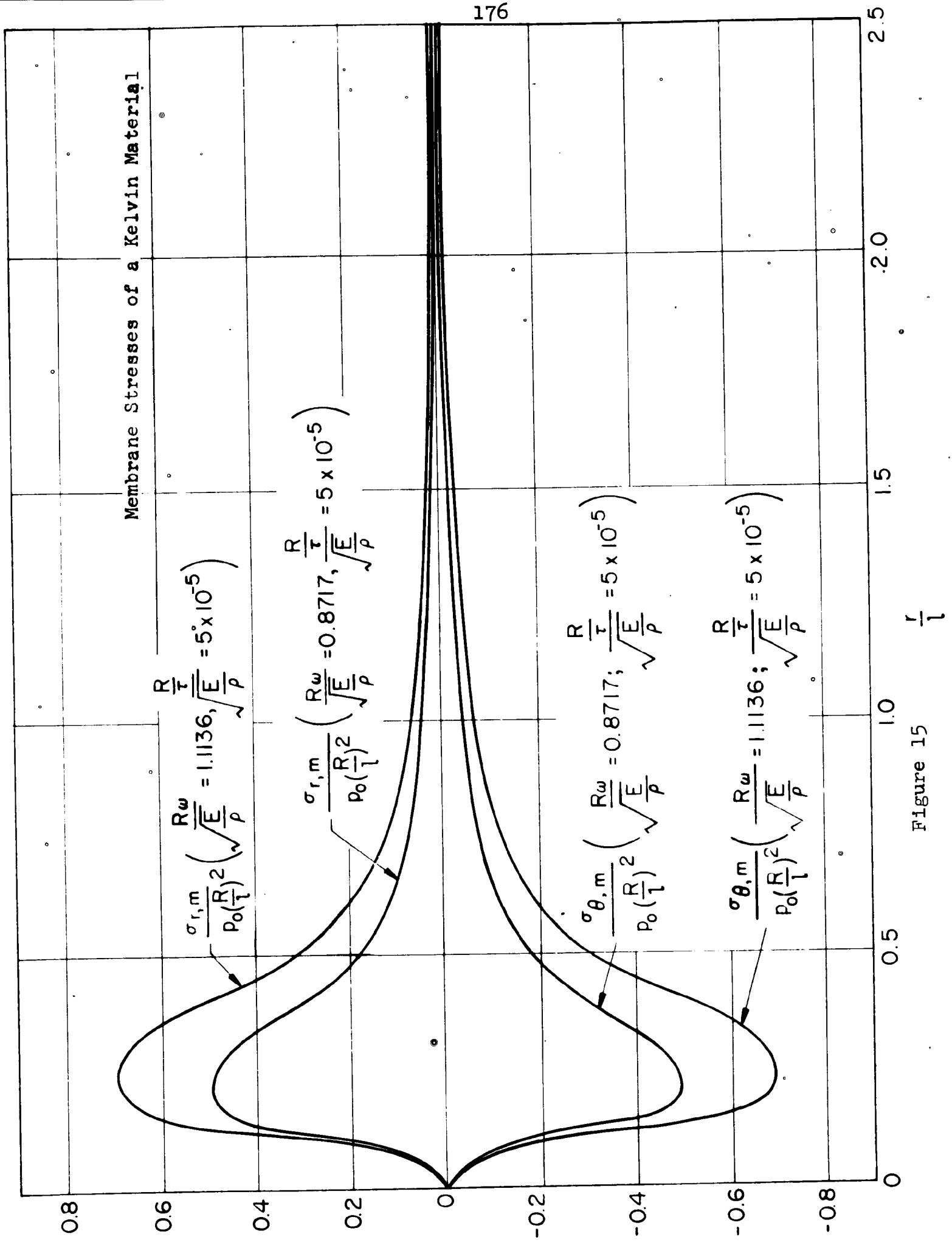
Membrane Stresses of a Kelvin Material
$\frac{\sigma_{r,m}}{p_0(\frac{R}{l})^2}\left(\sqrt{\frac{E}{\rho}}\frac{R\omega}{} = 1.1136, \frac{R}{\tau}\sqrt{\frac{E}{\rho}} = 5\times10^{-5}\right)$
$\frac{\sigma_{r,m}}{p_0(\frac{R}{l})^2}\left(\frac{R\omega}{\sqrt{\frac{E}{\rho}}} = 0.8717, \frac{R}{\tau}\sqrt{\frac{E}{\rho}} = 5\times10^{-5}\right)$
$\frac{\sigma_{\theta,m}}{p_0(\frac{R}{l})^2}\left(\frac{R\omega}{\sqrt{\frac{E}{\rho}}} = 0.8717;\ \frac{R}{\tau}\sqrt{\frac{E}{\rho}} = 5\times10^{-5}\right)$
$\frac{\sigma_{\theta,m}}{p_0(\frac{R}{l})^2}\left(\frac{R\omega}{\sqrt{\frac{E}{\rho}}} = 1.1136;\ \frac{R}{\tau}\sqrt{\frac{E}{\rho}} = 5\times10^{-5}\right)$
0.8
0.6
0.4
0.2
0
-0.2
-0.4
-0.6
-0.8
0
0.5
1.0
1.5
2.0
2.5
$\frac{r}{l}$

Figure 15

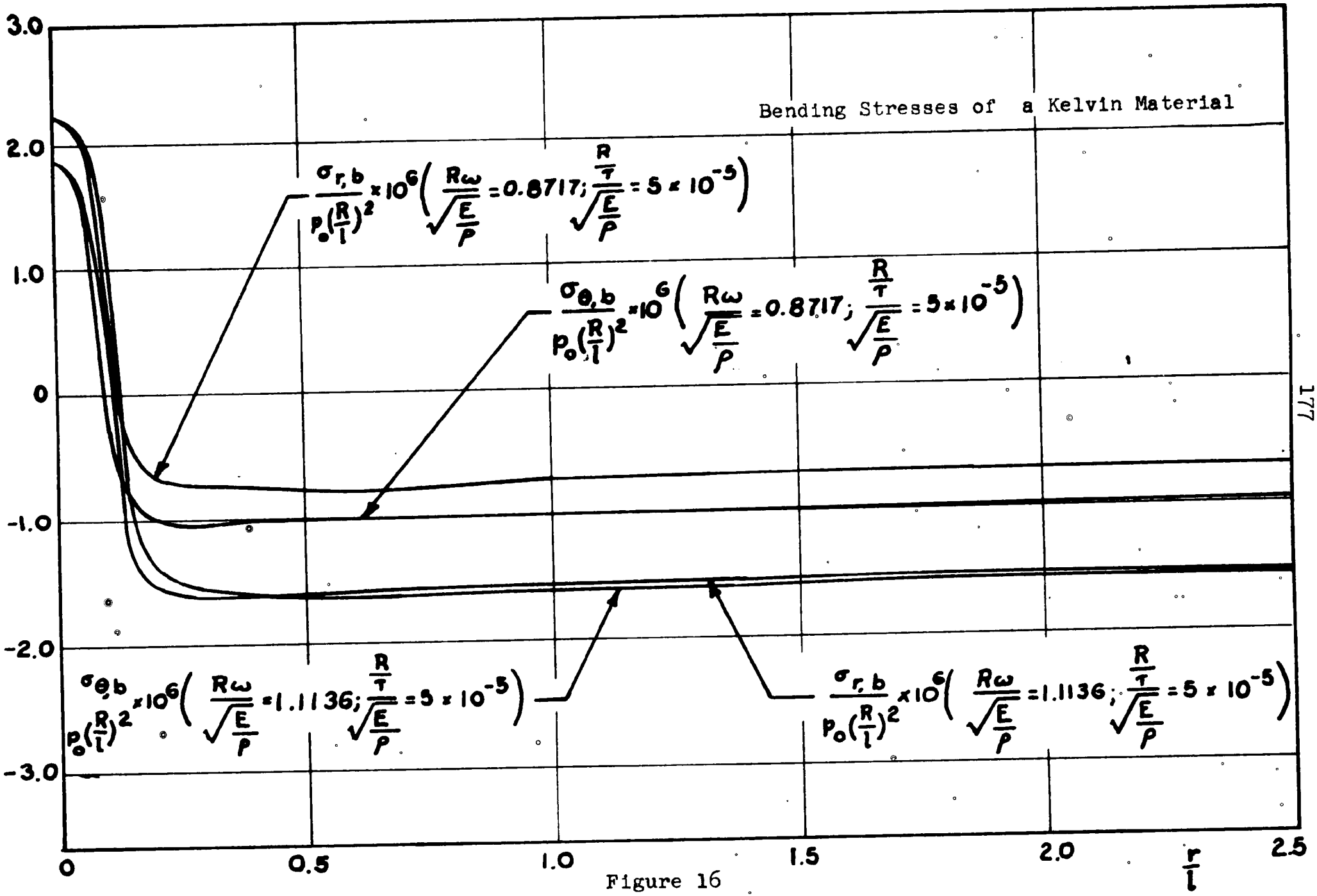
Bending Stresses of a Kelvin Material
$\frac{\sigma_{r,b}}{p_o(\frac{R}{l})^2} \times 10^6 \left(\frac{R\omega}{\sqrt{\frac{E}{\rho}}} = 0.8717; \frac{\frac{R}{\tau}}{\sqrt{\frac{E}{\rho}}} = 5 \times 10^{-5} \right)$
$\frac{\sigma_{\theta,b}}{p_o(\frac{R}{l})^2} \times 10^6 \left(\frac{R\omega}{\sqrt{\frac{E}{\rho}}} = 0.8717; \frac{\frac{R}{\tau}}{\sqrt{\frac{E}{\rho}}} = 5 \times 10^{-5} \right)$
$\frac{\sigma_{\theta,b}}{p_o(\frac{R}{l})^2} \times 10^6 \left(\frac{R\omega}{\sqrt{\frac{E}{\rho}}} = 1.1136; \frac{\frac{R}{\tau}}{\sqrt{\frac{E}{\rho}}} = 5 \times 10^{-5} \right)$
$\frac{\sigma_{r,b}}{p_o(\frac{R}{l})^2} \times 10^6 \left(\frac{R\omega}{\sqrt{\frac{E}{\rho}}} = 1.1136; \frac{\frac{R}{\tau}}{\sqrt{\frac{E}{\rho}}} = 5 \times 10^{-5} \right)$
3.0
2.0
1.0
0
-1.0
-2.0
-3.0
0
0.5
1.0
1.5
2.0
2.5
$\frac{r}{l}$

Figure 16

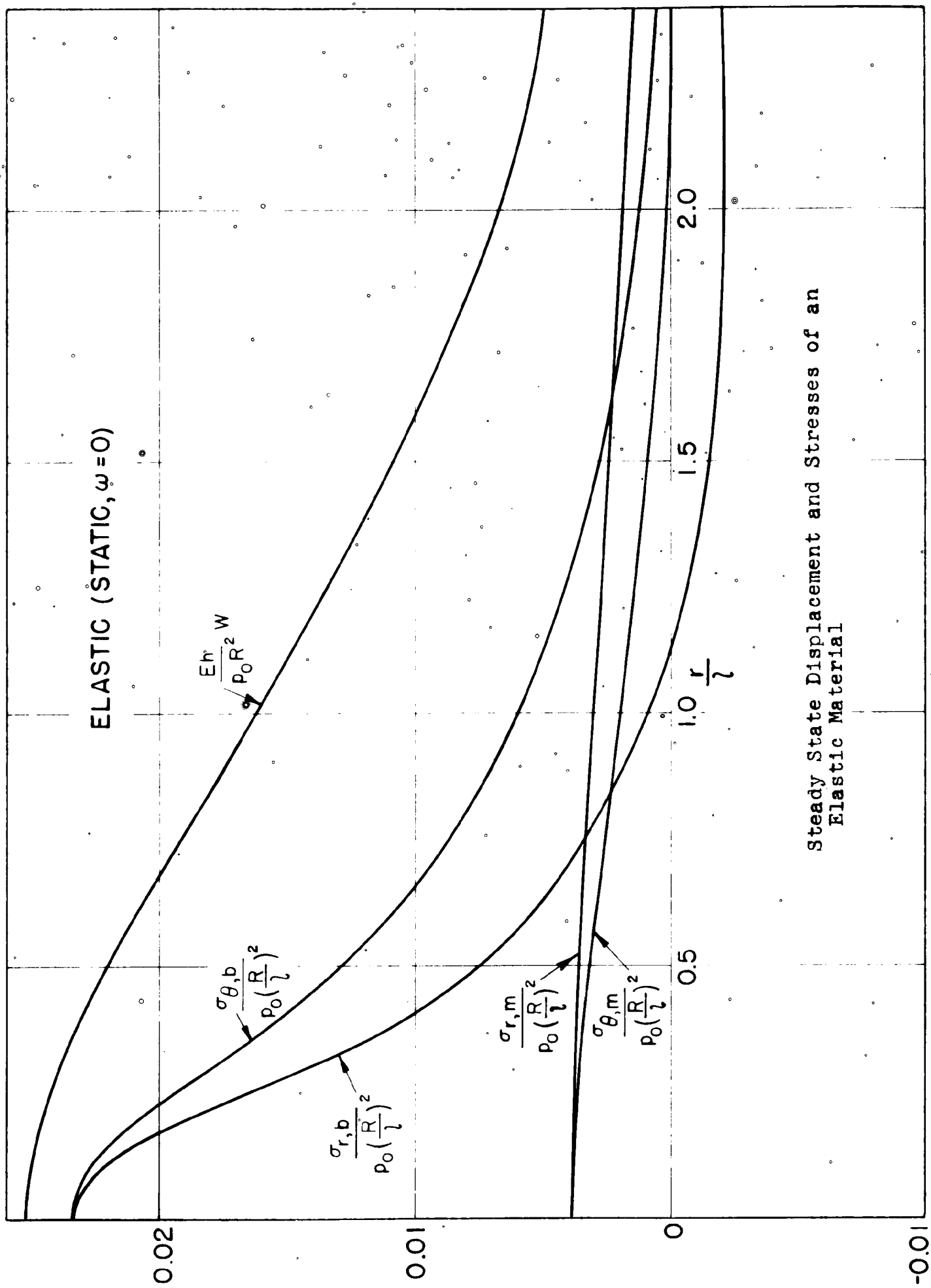

Steady State Displacement and Stresses of an Elastic Material

Figure 17

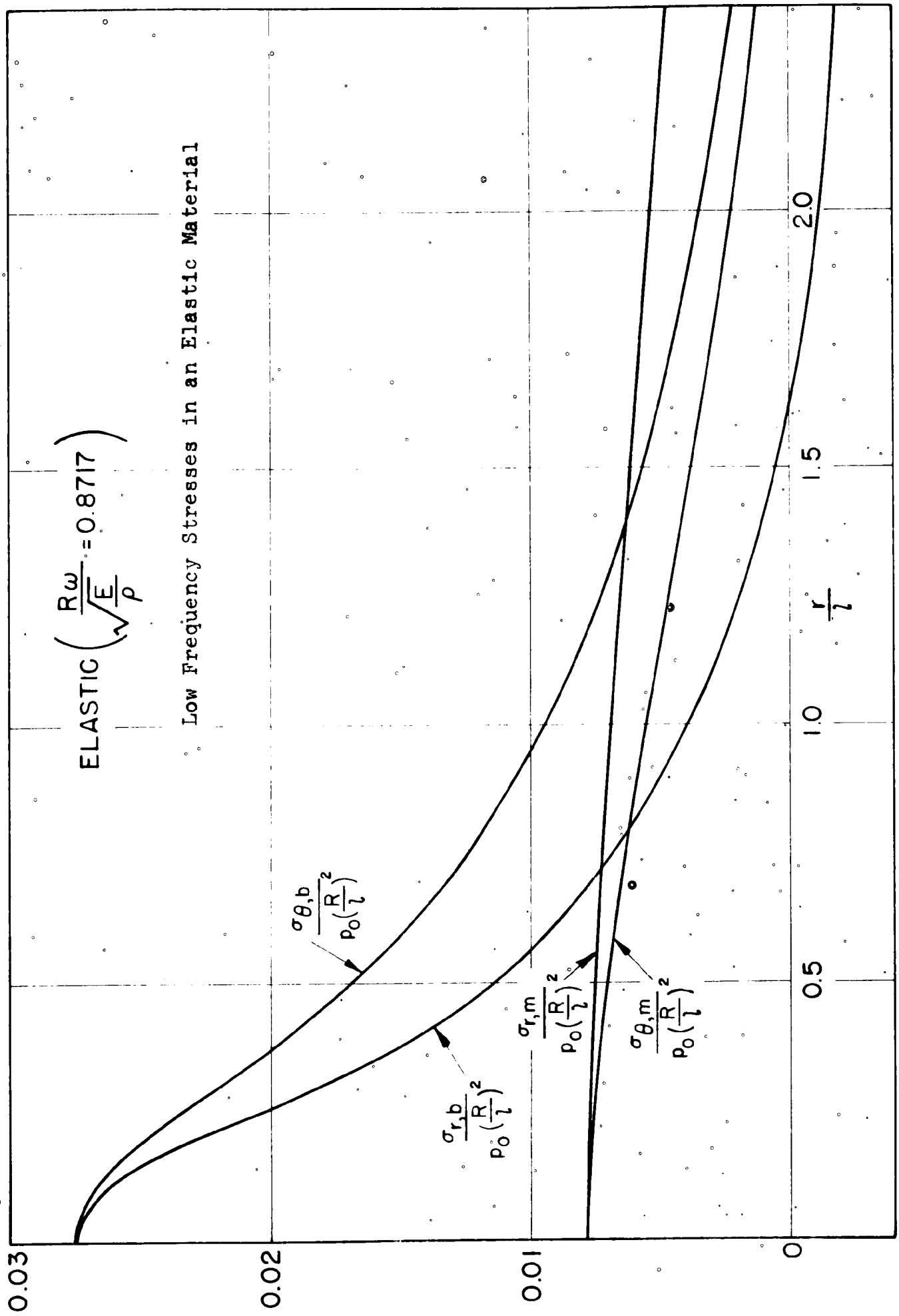
Low Frequency Stresses in an Elastic Material
ELASTIC $\left(\frac{R\omega}{\sqrt{\frac{E}{\rho}}}=0.8717\right)$
$\frac{\sigma_{\theta,b}}{p_o(\frac{R}{l})^2}$
$\frac{\sigma_{r,b}}{p_o(\frac{R}{l})^2}$
$\frac{\sigma_{r,m}}{p_o(\frac{R}{l})^2}$
$\frac{\sigma_{\theta,m}}{p_o(\frac{R}{l})^2}$
0.03
0.02
0.01
0
0.5
1.0
1.5
2.0
$\frac{r}{l}$

Figure 18

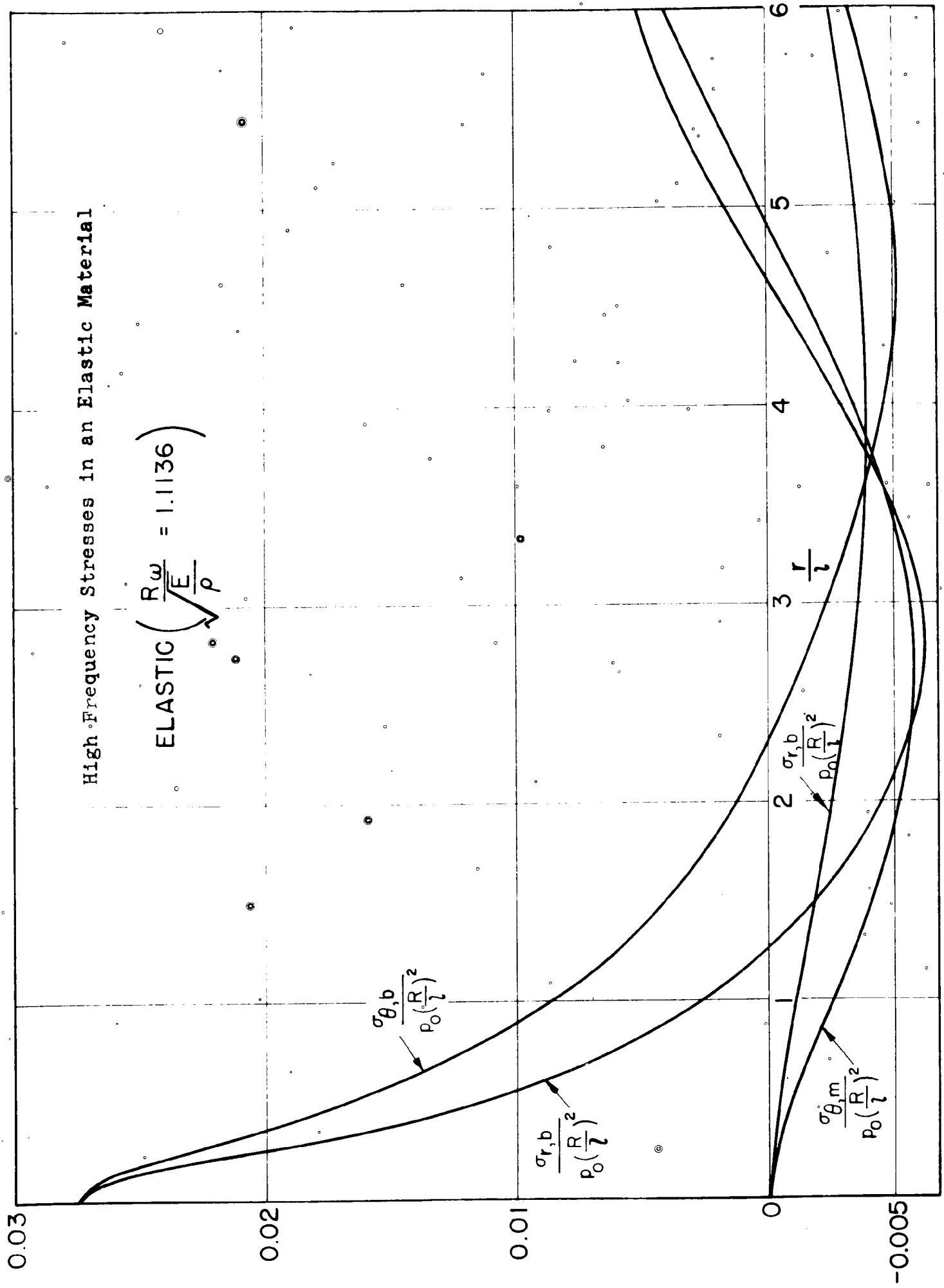
High Frequency Stresses in an Elastic Material
ELASTIC $\left(\frac{R\omega}{\sqrt{\frac{E}{\rho}}} = 1.1136\right)$
$\frac{\sigma_{\theta,b}}{p_o(\frac{R}{l})^2}$
$\frac{\sigma_{r,b}}{p_o(\frac{R}{l})^2}$
$\frac{\sigma_{r,b}}{p_o(\frac{R}{l})^2}$
$\frac{\sigma_{\theta,m}}{p_o(\frac{R}{l})^2}$
0.03
0.02
0.01
0
-0.005
1
2
3
4
5
6
$\frac{r}{l}$

Figure 19

the Bessel functions of complex argument.

The argument of the Kelvin functions involved in the solution may be specialized to the Maxwell and Kelvin materials according to the equations on p. 154 and 163 respectively. In so doing we see that in the case of the Maxwell material the phase of the complex argument is nearly zero for the low frequency range and nearly $\frac{\pi}{4}$ for the high frequency range, while in the case of the Kelvin material the phase of the arguments is nearly $\frac{\pi}{8}$ for both frequency ranges. Turning to the relations between the Bessel and Kelvin functions as exemplified by the following expression for ber(z),

$$ber(z) = \frac{1}{2}\left[J_0\left(e^{-i\frac{\pi}{4}}z\right) + J_0\left(e^{i\frac{\pi}{4}}z\right)\right]$$

and considering the two materials separately, we see that for the Maxwell material excited in the low frequency range the Bessel functions must be evaluated along a path which approaches the lines $\frac{\pi}{4}$ or $-\frac{\pi}{4}$ asymptotically in the complex plan. When the Maxwell material is excited in the high frequency range, on the other hand, the Bessel functions must be evaluated either along a line which approaches the real axis asymptotically for increasing z or approaches the imaginary axis asymptotically for increasing z. The distinctly different behavior of the Bessel functions along the imaginary axis as compared to that along the real axis

accounts for the different stress and displacement distributions in the two frequency ranges.

Since the Kelvin material does not exhibit a change of phase in the argument as the exciting frequency moves from one frequency range to another, the stresses and displacements are not qualitatively distinct for the two ranges. The dissimilarity of the Kelvin material displacement and stresses as compared to the Maxwell displacement and stresses for either frequency range is again due to the phase angle of the argument. From the properties of the Bessel functions one may conclude, in fact, that for any linear viscoelastic material the qualitative nature of the steady state stress and displacement distribution is determined exclusively by the behavior of the phase angle in the argument of the Kelvin functions.

BIBLIOGRAPHY

1. Maxwell, J., "On the Dynamic Theory of Gases", Philosophical Transactions of the Royal Society of London, Vol. 157 (1867), 49-88. (The paper was actually read in May 1866).

2. Maxwell, J., "On the Dynamic Theory of Gases", Philosophical Magazine, Series 4, Vol. 35 (1868), 129-145.

3. Boltzmann, L., "Zur Theorie der Elastiches Nachwirkung", Annalen der Physik und Chemie, Erganzungsband, Poggendorff Series, Vol. 7 (1876), 624-654.

4. Meyer, O. E., "Theorie der Elastishen Nachwirkung", Annalen der Physik und Chemie, Poggendorff Series, Vol. 227 (1874), 108-119.

5. Steintz, H., "Uber die Dampfung der Torsionsschwingungen von Drahten", Annalen der Physik und Chemie, Poggendorff Series, Vol. 226 (1874), 387-420.

6. Kelvin (Sir W. Thompson), "Elasticity", Encyclopedia Britannica, ninth edition (1875 or 1878). This was evidently part of a paper which appeared in the Proceedings of the Royal Society of London on May 18, 1865. It is reproduced in the Mathematics and Physics Papers by Sir William Thompson, Cambridge University Press, Cambridge (1890).

7. Voigt, W., "Uber die innere Reibung fester Korper", Abhandlungen der Konig. Gesell, Wissensch., Goettingen, Vol. 36 (1890), 105.

8. Reiner, M., Twelve Lectures on Theoretical Rheology, Interscience Publishers, Inc., New York (1949).

9. Wiechert, E., "Gesetze der Elastischen Nachwirkung fur Constante Temperatur", Annalen der Physik und Chemie, Wiedeman Series, Vol. 15, No. 286 (1893), 335-348 and 546-570.

10. Gross, B., Mathematical Structure of the Theories of Viscoelasticity, Hermann and Cie, Paris (1956).

11. Alfrey, T., "Non-Homogeneous Stresses in Visco-Elastic Media", Quarterly of Applied Mathematics, Vol. 2 (1944), 113-119.

12. Simha, R., "On Relaxation Effects in Amorphous Media", Journal of Applied Physics, Vol. 13, No. 3 (1942), 201-207.

13. Tsien, H. S., "A Generalization of Alfrey's Theorem for Visco-Elastic Media", Quarterly of Applied Mathematics, Vol. 8, No. 1 (1950), 104-106.

14. Read, W. T., "Stress Analysis for Compressible Visco-Elastic Materials", Journal of Applied Physics, Vol. 21 (1950), 671-674.

15. Staverman, A. J., and Schwarzl, F., Proceedings of the Royal Society, Academy of Science, Amsterdam.

16. Staverman, A. J., "Thermodynamics of Linear Viscoelastic Behavior", Proceedings of the Second International Congress on Rheology, Academic Press, Inc., New York (1954), 134-138.

17. Meixner, J., "Die Thermodynamische Theorie der Relaxationserschienungen und irh Zusammenhand mit der Nachwirkungstheorie", Kolloid Zeitschrift, Vol. 134, No. 1 (1953), 3-14.

18. Meixner, J., "Thermodynamische Theorie der Elastischen Relaxation", Zeitschrift fur Naturforschung, Vol. 9a, No. 7/8, July/August 1954, 654-663.

19. Biot, M. A., "Theory of Stress-Strain Relations in Anisotropic Viscoelasticity and Relaxation Phenomena", Journal of Applied Physics, Vol. 25, No. 11 (1954), 1385-1391.

20. Biot, M. A., "Variational Principles in Irreversible Thermodynamics, with Applications to Visco-elasticity", Physical Review, Vol. 97, No. 6 (1955), 1463-1469.

21. Biot, M. A., "Theory of Deformation of a Porous Visco-elastic Anisotropic Solid", Journal of Applied Physics, Vol. 27, No. 5 (1956), 459-467.

22. Volterra, E., "On Elastic Continua with Hereditary Characteristics", Journal of Applied Mechanics, Vol. 18, No. 3 (1951), 273-279.

23. Rosovsky, M. J., "Applications of Integro-differential Equations to Dynamic Problems in the Theory of Elasticity in Case of After-effects", Applied Math and Mechanics, Vol. 11, No. 3 (May-June 1947), 329-338.

24. Brull, M. A., "A Structural Theory Incorporating the effect of Time-Dependent Elasticity", Doctoral Thesis, University of Michigan (1952), Thesis No. 3106.

25. Gubanov, A. I., "On the Theory of Structured Liquids", Journal of Technical Physics, Vol. 17, No. 6, (1947), 629-640.

26. Lee, E. H., "Stress Analysis in Visco-elastic Bodies", Quarterly of Applied Mathematics, Vol. 13, No. 2, (1955), 183-190.

27. Sternberg, E., "On Transient Thermal Stress in Linear Viscoelasticity", Brown University Report TR 3, Nonr 562(20)/3.

28. Lee, E. H., "Stress Analysis in Viscoelastic Materials", Journal of Applied Physics, Vol. 27, No. 7 (1956), 665-672.

29. Adler, F. T., Sawyer, W. M., Ferry, J. D., "Propagation of Transverse Waves in Viscoelastic Media", Journal of Applied Physics, Vol. 20, No. 11 (1949), 1036-1041.

30. Oestreicher, H. L., "Field and Impedance of an Oscillaring Sphere in a Viscoelastic Medium with an application to Biophysics", Journal of the Acoustical Society of America, Vol. 23, No. 6 (1951), 707-714.

31. Alfrey, T., "Methods of Representing the Properties of Viscoelastic Materials", Quarterly of Applied Mathematics, Vol. 3, No. 2 (1945), 143-150.

32. Burington, R. S., and Torrance, C. C., Higher Mathematics, McGraw-Hill Book Co., New York (1939).

33. Dalton, J. P., Symbolic Operators, Witwaterstrand University Press, Johannesburg, South Africa (1954).

34. Love, A. E. H., Mathematical Theory of Elasticity, 4th Edition, Dover Press, New York (1944).

35. Byrne, R., Jr., "Theory of Small Deformations of a Thin Elastic Shell", Seminar Report in Mathematics, University of California Press, Los Angeles (1944), 103.

36. Hildebrand, F., Reissner, H., and Thomas, G., "Notes on the Foundation of the Theory of Small Displacements of Orthotropic Shells", NACA Technical Note No. 1833 (1949).

37. Marguerre, K., "Zur Theorie der gekrummten Platte grosser Formanderung", Proceedings of the 5th International Congress of Applied Mechanics, (1939), 93-101.

38. Reissner, E., "On Transverse Vibrations of Thin, Shallow Elastic Shells", Quarterly of Applied Mathematics, Vol. 13, No. 2 (1955), 169-176.

39. Naghdi, P. M., and Cooper, R. M., "Propagation of Nonaxially Symmetric Waves in Elastic Cylindrical shells", Journal of the Acoustical Society of America, Vol. 29, No. 12 (December 1957) 1365-1373.

40. Naghdi, P. M., and Cooper, R. M., "Propagation of Elastic Waves in Cylindrical Shells, Including the Effects of Transverse Shear and Rotatory Inertia", Journal of the Acoustical Society of America, Vol. 28, No. 1 (January 1956), 56-63.

41. Reissner, E., "Stresses and Small Displacements of Shallow Spherical Shells II", Journal of Mathematics and Physics, Vol. 25, No. 4 (1947), 279-300.

42. Reissner, E., Corrections to the paper "Stresses and Small Displacements of Shallow Shells II", Journal of Mathematics and Physics, Vol. 27, No. 3 (1949), 240.

43. Reissner, E., "On Axisymmetric Vibrations of Shallow Spherical Shells", Quarterly of Applied Mathematics, Vol. 13, No. 3 (1955), 279-290.

44. Magnus, W., and Oberhettinger, F., Formulas and Theorems for the Special Functions of Mathematical Physics, Chelsea Publishing Co., New York (1949).

45. McLachlan, N. W., Bessel Functions for Engineers, Oxford at the Clarendon Press (1955).

46. Sneddon, I. N., Fourier Transforms, McGraw-Hill Book Company, New York (1951).

47. Churchill, R. V., Operational Mathematics, 2nd Edition, McGraw-Hill Book Company, New York (1958).

48. Bateman Manuscript Project, Erdelyi, A., Magnus, W., Oberhettinger, F., Tricomi, F. G., Tables of Integral Transforms, Vol. 1, McGraw-Hill Book Company, New York (1954).

49. Bateman Manuscript Project, Erdelyi, A., Magnus, W., Oberhettinger, F., Tricomi, F. G., Tables of Integral Transforms, Vol. 2, McGraw-Hill Book Company, New York (1954).

50. Watson, G. N., A Treatise on the Theory of Bessel Functions

51. Lee, E. H. and Kantor, I., "Wave Propagation in Finite Rods of Viscoelastic Material", Journal of Applied Physics, Vol. 24, No. 9 (1953), 1115-1122.